CanyonLands Field
Moab, Utah

BID PACKAGE #2: TERMINAL BUILDING AND SITE DEVELOPMENT

ARCHITECT
PATRIK DAVIS ASSOCIATES
245 SO. CASCADE
MONTROSE, CO 81401
PH: (970) 249-5404
FAX: (970) 249-2768

CIVIL ENGINEER
BUCKHORN GEOTECH
222 S. PARK AVE.
MONTROSE, CO 81401
PH. (970) 249-6828
FAX: (970) 249-0945

STRUCTURAL ENGINEER
L J LINDAUER INC.
802 ROOD AVE.
GRAND JUNCTION , CO 81501
PH. (970) 241-0900
FAX: (970) 243-2430

MECHANICAL/ELECTRICAL ENGINEER
BURGGRAAF ASSOC., INC.
715 HORIZON DRIVE, SUITE #126
GRAND JUNCTION, COLORADO 81506
PH. (970) 243-3851
FAX (970) 243-8286

SYMBOL AND ABBREVIATION LEGEND

CIRCLED AREA SHOWN ON LARGE SCALE DETAIL — DETAIL NO. / SHEET NO.

EXIT SIGN

DIRECTIONAL

DETAIL REFERENCE — DETAIL NO. / SHEET NO.

ROOM NO. — ROOM NAME / ROOM NO.

BUILDING SECTION (SHOWN ON PLAN) — SECTION NO. / SHEET NO.

KEYNOTE — SEE LIST OF KEYNOTES ON EACH SHEET

REVISION MARK — REVISION NO.

ELEVATION REFERENCE (SHOWN ON PLAN) — ELEVATION NO. / SHEET NO.

INTERIOR ELEVATION — ELEVATION NO. / DWG NO.

WALL SECTION (SHOWN ON BUILDING ELEVATION) — SECTION NO. / SHEET NO.

GRID DIMENSION LINE — STRUCT. DIM. INDICATION (FOR GRID, CONC. OPENING, CONC. WALL, WALL GIRT, ETC.)

MATCH LINE

PARTITION TYPES — (SEE PARTITION SCHEDULE)

ELEVATION MARK

DOOR NO. — SAME NO. AS THE ROOM

STAND PIPE

EXISTING DIMENSION — (.....) (TO BE FIELD VERIFIED)

WINDOW TYPE — (SEE WINDOW SCHEDULE)

CODE DATA

MUNICIPAL CODE:

BUILDING FUNCTION:	AREA:	OCCUPANCY	CONSTRUCTION TYPE
TERMINAL	4447 s.f. NET	B	V-N

SPECIAL CONSTRUCTION REQUIREMENTS AND CODE COMPLIANCE FACTORS.

1. ALL CONSTRUCTION TO COMPLY WITH 1997 UNIFORM BUILDING CODE.

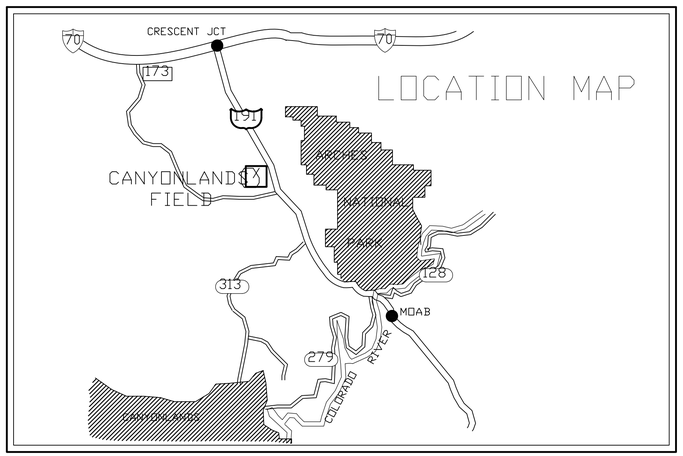

LIST OF DRAWINGS

GENERAL INFORMATION DRAWINGS
- G-1 COVER SHEET

CIVIL DRAWINGS:
- C-1 TERMINAL AREA GENERAL SITE PLAN
- C-2 DETAIL SHEET

ARCHITECTURAL:
- A-1 FLOOR PLAN
- A-2 SCHEDULES AND SLAB SCORING PLAN
- A-3 REFLECTED CEILING PLAN AND ROOF PLAN
- A-4 1/4' PARTIAL FLOOR PLAN
- A-5 1/4' PARTIAL FLOOR PLAN AND TOILET ELEVATIONS
- A-6 BUILDING SECTIONS
- A-7 BUILDING SECTIONS
- A-8 EXTERIOR ELEVATIONS
- A-9 DETAILS
- A-10 DETAILS
- A-11 DETAILS
- A-12 INTERIOR ELEVATIONS
- A-13 INTERIOR ELEVATIONS AND CASEWORK DETAILS

STRUCTURAL DRAWINGS
- S1.0 GENERAL
- S1.1 FOUNDATION PLAN
- S1.2 FRAMING PLAN

MECHANICAL DRAWINGS
- M-1 MECHANICAL PLAN
- P-1 PLUMBING PLAN
- MP-1 MECHANICAL/PLUMBING SCHEDULES

ELECTRICAL DRAWINGS
- E-1 ELECTRICAL PLAN
- E-2 ELECTRICAL PANEL SCHEDULE

REVISIONS:

patrik davis associates, a.i.a.
architecture planning
245 so. cascade
montrose, co 81401
phone (970) 249-5404
fax (970) 249-2768

CanyonLands Field
Moab, Utah

BID PACKAGE #2 - TERMINAL AND SITE DEVELOPMENT
COVER SHEET

DRAWN	GW
CHECKED	PD
DATE	10/26/98
DWG. #	A-CVR
job no.	9713
sheet	G-1
# of sheets	

KEYNOTES

1A LINE OF CANOPY ABOVE. CANOPY COMPOSED OF 1'-4" DIA. PEELED AND UNPEELED LOGS SITTING ON GLU-LAM BEAMS.

1B LINE OF CANOPY ABOVE. CANOPY COMPOSED OF 6" DIA. PEELED AND UNPEELED LOGS SITTING ON GLU-LAM BEAMS.

2 (2) 6 3/4" X 18" GLU-LAM BEAMS CANTILEVERED 12'-0" BEYOND GRIDLINE F. BACK-SPAN BEAMS TO 12" COLUMNS AT GRIDLINE E.

3 (2) 6 3/4" X 18" GLU-LAM BEAMS CANTILEVERED 8' AND 4' BEYOND GRIDLINE F. BACK-SPAN BEAMS TO WALL ABOVE WOMEN 123 DOOR.

4 COLORED CONCRETE WITH BROOM FINISH AND SCORED JOINTS.

5 CONDENSING UNITS. SEE MECHANICAL DRAWINGS.

6 5 1/8" X 12" GLU-LAM BEAM ON 8" MIN. DIA. LOG POSTS. 1' - 2" DIA. PEELED AND UNPEELED LOGS 7'-0" HIGH. NAIL TO (2) REDWOOD 2X6 HORIZONTALS HOLD LOGS 6" ABOVE FINISH GRADE.

7 ROOF LINE ABOVE.

8 RELOCATED PROPANE TANK ON NEW CONC. SLAB AND NEW EIFS SCREEN WALL. SEE 19.

9 SHADE SCREEN ABOVE. SEE DETAIL.

10 NEW 6' WIDE VEHICLE GATE IN EXISTING CHAIN LINK FENC.

11 EXISTING CHAIN LINK FENCE TO REMAIN.

12 EXISTING TREE TO REMAIN.

13 REMOVE EXISTING VEHICLE GATE. INFILL WITH FENCING AND NEW 3'-0" WIDE PASSENGER GATE.

14 EXISTING ELEC. SERVICE TO REMAIN ON SEPARATE FEED, & TO REMAIN ACTIVE DURING CONSTRUCTION.

15 EXISTING LIGHT POLE TO REMAIN.

16 EXISTING GATE TO REMAIN.

17 EXISTING SHRUBS AND PLANTING BED TO REMAIN.

18 EXISTING LAWN AND IRRIGATION SYSTEM TO REMAIN.

19 REMOVE EXISTING SHED AND DELIVER TO OWNER. RELOCATE PROPANE TANK TO NORTH SIDE OF BUILDING. SEE 8.

19A RELOCATE (6) EXISTING BOULDERS ALONG SIDEWALK AND (12) LARGE VENEER STONES FROM OLD TERMINAL. INSTALL INTO SIDE OF SWALE.

20 ENTRY ISLAND LANDSCAPE AREA WITH PRIMARY SIGNAGE INSTALLED ON BOULDER. SEE DETAIL.

21 NEW SIDEWALK.

22 EXISTING SIDEWALK TO REMAIN.

23 COLORED CONCRETE 1:12 RAMP WITH BROOM FINISH AND SCORED JOINTS. 1 1/2" DIAMETER HANDRAILS BOTH SIDES, MOUNTED 36" ABV. RAMP AND 1 1/2" MIN. FROM WALLS. PAINT HANDRAILS.

24 COLORED CONCRETE RISERS & TREADS. BROOM FINISH.

25 2'-0" HIGH X 1'-4" WIDE 2X4 AND STUCCO (EIFS) WALL WITH FLAGSTONE CAP AND (3) SCUPPERS. SEE DETAIL.

26 EXTEND GLU-LAM BEAM 2'-6" PAST FACE OF COLUMN.

27 ROLL CONCRETE RAMP TO GRADE, BOTH SIDES.

28 1" - 2" DIA. PEELED AND UNPEELED LOGS 7'-0" HIGH. NAIL TO (2) REDWOOD 2X6 HORIZONTALS. HOLD LOGS UP 2" ABOVE CONCRETE.

29 LINE OF 8'-0" HIGH SOFFIT ABOVE.

30 2 X 8 WALL 4'-6" HIGH. 5/8" GYP. BOARD AND FLAGSTONE CAP. WALL COVERING BY OTHERS.

31 6 3/4" X 18" GLU-LAM BEAM ABOVE. OPEN BELOW.

32 2 X 4 WALL CENTERED UNDER 6 3/4" X 18" GLU-LAM BEAM ABOVE.

33 2 X 6 WALL WITH 5/8" MOISTURE-RESISTANT GYPSUM BOARD EACH SIDE.

34 12" DIA. LOG COLUMN. 1 OF 3 ON GRIDLINE 3.

35 12" DIA. LOG COLUMN. 1 OF 3 ON GRIDLINE 4.

37 OVERHEAD COILING GRILLES.

38 PAY TELEPHONE & ENCLOSURE (N.I.C.).

39 DRINKING FOUNTAIN.

40 GROUND-FACE EXPOSED AGGREGATE SLAB WITH SCORED JOINTS AS SHOWN. CLEAR SEALER.

41 VENDING MACHINES. N.I.C.

42 TICKETING COUNTERS. SEE DETAILS.

43 12" DIAMETER HALF-LOG.

44 AIRLINE FLIGHT SCHEDULE BOARDS N.I.C.

45 SANDSTONE RUBBLE BASE. SEE ELEVATIONS.

46 LINE OF 2 X 4 DOUBLE WALL ABOVE. SEE DETAIL. ALSO SEE 8/A-1 (29) FOR BULKHEAD BELOW BEAM.

47 CERAMIC TILE LEDGE. SEE DETAIL.

48 DOUBLE 2 X 4 WALL. WALL ON GRIDLINE C, SEE (32). SECOND 2 X 4 WALL SCABBED ON LOBBY 104 SIDE. VARY PLATE HEIGHT FROM 3'-6" TO 6'-0" A.F.F. FOR FLAGSTONE LEDGE. SEE C/A-7. 5/8" GYP. BD. FULL HEIGHT. WALL COVERING BY OTHERS ON LOWER SCABBED WALL.

49 WOOD FENCE. 3

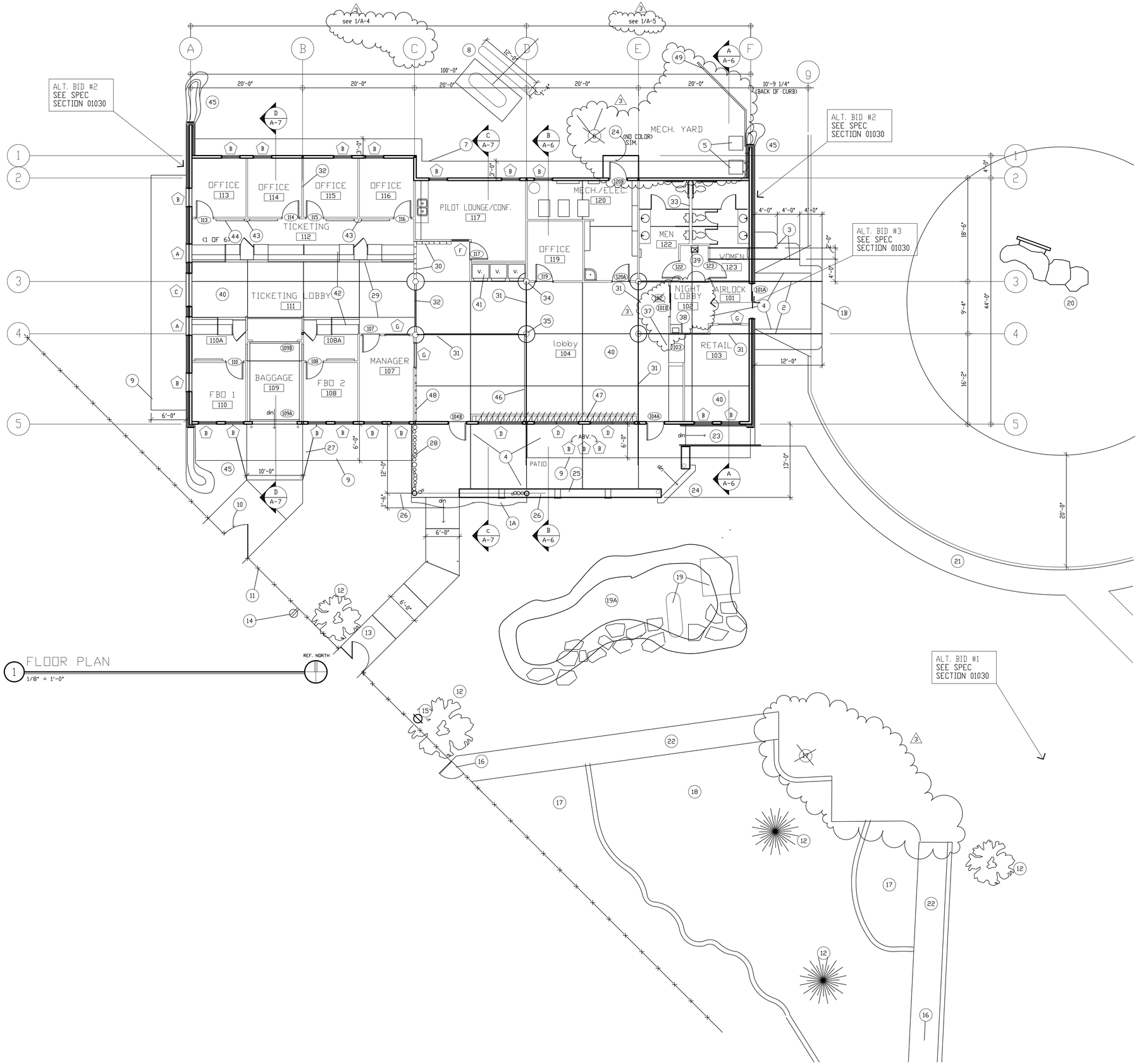

1 FLOOR PLAN
1/8" = 1'-0"

REVISIONS:
3 6/1/00 AS-BUILTS

patrik davis associates, a.i.a.
architecture planning
245 so. cascade
montrose, co 81401
phone (970) 249-5404
fax (970) 249-2768

Canyonlands Field
Moab, Utah
BID PACKAGE #2 - TERMINAL FLOOR PLAN

DRAWN	
CHECKED	PD
DATE	10/26/98
DWG. #	A-FP
job no.	9713
sheet	A-1
# of sheets	

Door Schedule

	Door Type	Location Room to Room		Door Size W	Door Size H	Material Door	Material Frame	Details Head	Details Jamb	Rating Minutes	Remarks
101A	A	Exterior	101	6'-0"	7'-0"	AL/GL	AL	- -	- -	-	*3, *4, *5.
101B	A	101	102	6'-0"	7'-0"	AL/GL	AL	- -	- -	-	*4, *5.
102	B	102	104	6'-0"	8'-0"	AL	AL	- -	- -	-	*1.
103	C	103	104	5'-0"	8'-0"	AL	AL	- -	- -	-	*1.
104A	D	104	EXT.	3'-0"	7'-0"	AL/GL	AL	- -	- -	-	*3, *4.
104B	D	104	EXT.	3'-0"	7'-0"	AL /GL	AL	- -	- -	-	*3, *4.
105										-	NOT USED
106										-	NOT USED
107	E	111	107	3'-0"	7'-0"	WD	HM	8/A-10	8/A-10	-	
108	F	108A	108	3'-0"	7'-0"	WD	HM	8/A-10	8/A-10	-	
109A	G	Ext.	109	8'-0"	8'-0"	INSTL	STL	- -	7/A-10	-	*2.
109B	G	109	111	8'-0"	8'-0"	STL	STL	- -	- -	-	*2.
110	F	110A	110	3'-0"	7'-0"	WD	HM	8/A-10	8/A-10	-	
111										-	NOT USED
112										-	NOT USED
113	F	112	113	3'-0"	7'-0"	WD	HM	8/A-10	8/A-10	-	
114	F	112	114	3'-0"	7'-0"	WD	HM	8/A-10	8/A-10	-	
115	F	112	115	3'-0"	7'-0"	WD	HM	8/A-10	8/A-10	-	
116	F	112	116	3'-0"	7'-0"	WD	HM	8/A-10	8/A-10	-	
117	E	104	117	3'-0"	7'-0"	WD	HM	8/A-10	8/A-10	-	
118										-	NOT USED
119	E	104	119	3'-0"	7'-0"	WD	HM	8/A-10	8/A-10		
120A	E	104	120	3'-0"	7'-0"	WD	HM	8/A-10	8/A-10	20 min.	
120B	H	120	EXT.	3'-0"	7'-0"	HM	HM	- -	- -		
121											NOT USED
122	E	102	122	3'-0"	7'-0"	WD	HM	8/A-10	8/A-10		
123	E	102	123	3'-0"	7'-0"	WD	HM	8/A-10	8/A-10		

LEGEND:
AL = Aluminum
GL = Glass
HM = Hollow Metal
INSTL = Insulated Steel
STL = Steel
WD = Prefinished wood

NOTES:
*1. Overhead coiling grille.
*2. Overhead garage door.
*3. Tinted insulated glass (TIG).
*4. Tempered safety glass where required.
*5. Automatic sliding door with motion sensors both sides.
*6. 3'-0" x 7'-0" hinged aluminum and glass door with +/- 3'-0" x 7'-0" sidelite.

Exterior Window Schedule

	Size W	Size H	Glass Mat	Frame Mat	Frame Fin	Header A.F.F.	Details Head	Details Jamb	Details Sill	Remarks
A	3'-0"	2'-6"	TIG	AL	PRE	7'-0"	4/A-10	5/A-10	6/A-10	
B	3'-0"	4'-0"	TIG	AL	PRE	7'-0" and 15'-4"	*3.	*4.	*3.	
C	6'-0"	7'-0"	TIG	AL	PRE	9'-0"	4/A-10	5/A-10	6/A-10	*2.
D	8'-0"	7'-0"	TIG	AL	PRE	9'-0"	1/A-9	1/A-9	1/A-9 SIM.	*2.

Interior Window Schedule

	Size W	Size H	Glass Mat	Frame Mat	Frame Fin	Header A.F.F.	Details Head	Details Jamb	Details Sill	Remarks
E										NOT USED
F	2'-0"	8'-0"	RG	WD*	S/S	8'-3 1/2"	4/A-11 SIM.	4/A-11	4/A-11	*1, *2.
G	4'-0"	3'-0"	CTG	WD*	S/S	9'-0"	5/A-11	5/A-11	- -	*1, *2.

LEGEND:
AL = 2" X 4" Aluminum Thermal Break Frame
CTG = 1/4" Clear Tempered Glass
PRE = Prefinished
RG = 1/4" Rain glass.
S/S = Stain and Seal
TIG = +/- 1" Tinted Insulated Glass
WD = 1/2" x 3/4" quarter round stop

Notes:
*1. 1/4" glass with quarter round stop all around.
*2. Tempered safety glass where required.
*3. 1/A-9 , 2/A-9 , 1/A-10, 4/A-10
*4. 1/A-9 SIM., 2/A-9 SIM., 1/A-10 SIM., 4/A-10 SIM.

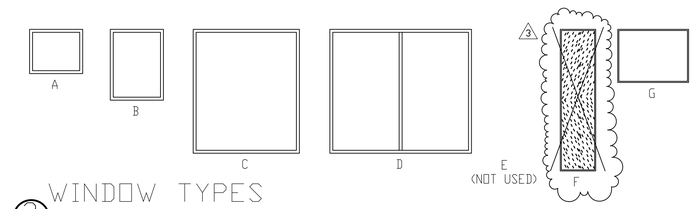

2 WINDOW TYPES
1/4" = 1'-0"

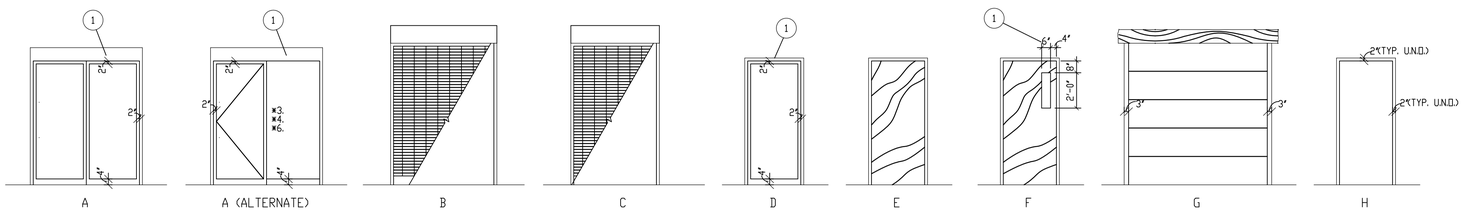

1 DOOR TYPES
1/4" = 1'-0"

NOTES: (1) DIMENSIONS FOR INTENT ONLY. USE MANUFACTURER'S STANDARD NARROW STILE DIMENSIONS. NO CUSTOM.

SLAB KEY

= GROUND-FACE EXPOSED AGGREGATE SLAB W/ SCORED JOINTS AND CLEAR SEALER.
= COLORED CONCRETE WITH SCORED JOINTS AND BROOM FINISH
= STANDARD EXTERIOR CONCRETE WITH SCORED JOINTS AND BROOM FINISH.
= STANDARD INTERIOR CONCRETE SLAB WITH JOINTS AS REQUIRED AND SMOOTH FINISH (CARPET OVER).
= STANDARD INTERIOR CONCRETE SLAB WITH JOINTS AS REQUIRED AND SMOOTH FINISH (CLEAR SEALER).

Finish Schedule

#	Room Name	Floor Mat.	Floor Finish	Base Mat.	Base Finish	East Wall Mat.	East Wall Finish	South Wall Mat.	South Wall Finish	West Wall Mat.	West Wall Finish	North Wall Mat.	North Wall Finish	Ceiling Mat.	Ceiling Finish	Ceiling Height	Remarks
101	Airlock	Conc. 2	Broom	WD	S/S	GB	PT	GB	PT	GB	PT	GB	PT	GB	PT	8'-0"	
102	Night Lobby	Conc. 1	CS	WD	S/S	GB	PT	GB	PT	GB	PT	GB	PT	GB	PT	8'-0"	
103	Retail	Conc. 1	CS	WD	S/S	GB	PT	GB	PT	GB	PT	GB	PT	ACT	PRE	10'-0"	9'-2" behind GLB
104	Lobby	Conc. 1	CS	WD	S/S	GB	PT	GB	PT	GB/WC*	PT/O	GB/WC*	PT/BO	GB/GLB	PT/S/S	2:12 slope	*1.
105	Not used																
106	Not used																
107	Manager	CPT	PRE	RCB	PRE	GB	PT	GB	PT	GB	PT	GB	PT	ACT	PRE	9'-0"	
108	FBO 2	CPT	PRE	RCB	PRE	GB	PT	GB	PT	GB	PT	GB	PT	ACT	PRE	9'-0"	
108A	Ticketing	CPT	PRE	RCB	PRE	GB	PT	GB	PT	GB	PT	CW	PRE	ACT	PRE	8'-2"	
109	Baggage	Conc. 3	CS	RCB	PRE	GB	PT	GB	PT	GB	PT	GB	PT	GB	PT	10'-0"	
110	FBO 1	CPT	PRE	RCB	PRE	GB	PT	GB	PT	GB	PT	GB	PT	ACT	PRE	9'-0"	
110A	Ticketing	CPT	PRE	WD	S/S	GB	PT	GB	PT	GB	PT	CW	PRE	ACT	PRE	8'-2"	
111	Ticketing Lobby	Conc. 1	CS	WD	S/S	GB	PT	GB	PT	GB	PT	GB	PT	ACT	PRE	10'-0"	
112	Ticketing	CPT	PRE	WD	S/S	GB	PT	GB	PT	GB	PT	GB	PT	ACT	PRE	8'-2"	
113	Office	CPT	PRE	RCB	PRE	GB	PT	GB	PT	GB	PT	GB	PT	ACT	PRE	8'-0"	
114	Office	CPT	PRE	RCB	PRE	GB	PT	GB	PT	GB	PT	GB	PT	ACT	PRE	8'-0"	
115	Office	CPT	PRE	RCB	PRE	GB	PT	GB	PT	GB	PT	GB	PT	ACT	PRE	8'-0"	
116	Office	CPT	PRE	RCB	PRE	GB	PT	GB	PT	GB	PT	GB	PT	ACT	PRE	8'-0"	
117	Pilot Lounge/Conference	CPT	PRE	RCB	PRE	GB	PT	GB	PT	GB	PT	GB	PT	ACT	PRE	8'-0"	
118	Not Used																
119	Office	CPT	PRE	RCB	PRE	GB	PT	GB	PT	GB	PT	GB	PT	ACT	PRE	8'-0"	
120	Mechanical/Electrical	Conc. 3	CS	RCB	PRE	GB*	PT	GB*	PT	GB*	PT	GB	PT	GB	PT	8'-0"	*2.
121	Not Used																
122	Men's Toilet	Conc. 1	CS	RCB	PRE	FRP/GB	PRE/PT	GB	PRE/PT	FRP/GB	PRE/PT	FRP/GB	PRE/PT	GB	PT	8'-0"	*3.
123	Women's Toilet	Conc. 1	CS	RCB	PRE	FRP/GB	PRE/PT	GB	PRE/PT	FRP/GB	PRE/PT	FRP/GB	PRE/PT	GB	PT	8'-0"	*3.

LEGEND:
ACT = 2x2 Acoustical ceiling tile system
Conc. 3 = Standard Interior Concrete Slab
Conc. 2 = Colored Concrete
Conc. 1 = Ground-Face Exposed Aggregate
CS = Clear Sealer
CW = Casework
CPT = Carpet
FRP = Fiber Reinforced Panel with Wood Cap
GB = 5/8" Gypsum Board
GLB = Glu-lam beam
BO = By Others (N.I.C.)
PRE = Prefinished
PT = Paint
RCB = 4" Rubber cove base
S/S = Stain and Seal
WC = Wall Covering over 5/8" Gypsum Board.
WD = 1x4 D Pine Base with 1/2" Radius @ Top Edge.

NOTES:
*1. See floor plan for location of wall covering.
*2. 5/8" type X gypsum board.
*3. Toilet room walls to have 4'-0" high FRP wainscot with painted gypsum board above. See interior elevations.

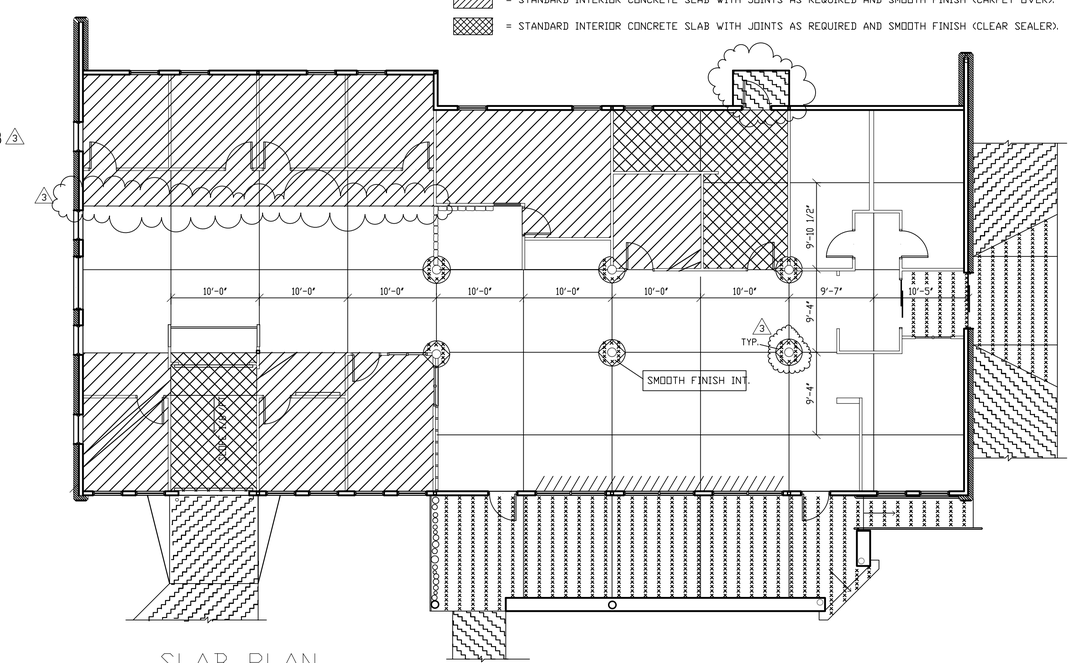

3 SLAB PLAN
1/8" = 1'-0"

REVISIONS:
3 6/1/00 AS-BUILTS

patrik davis associates, a.i.a.
architecture planning
245 so. cascade
montrose, co 81401
phone (970) 249-5404
fax (970) 249-2768

Canyonlands Field
Moab, Utah
BID PACKAGE #2 - SCHEDULES AND SLAB SCORING PLAN

DRAWN	GW
CHECKED	PD
DATE	10/26/98
DWG. #	A-SCH-B.DWG
job no.	9713
sheet	A-2
# of sheets	

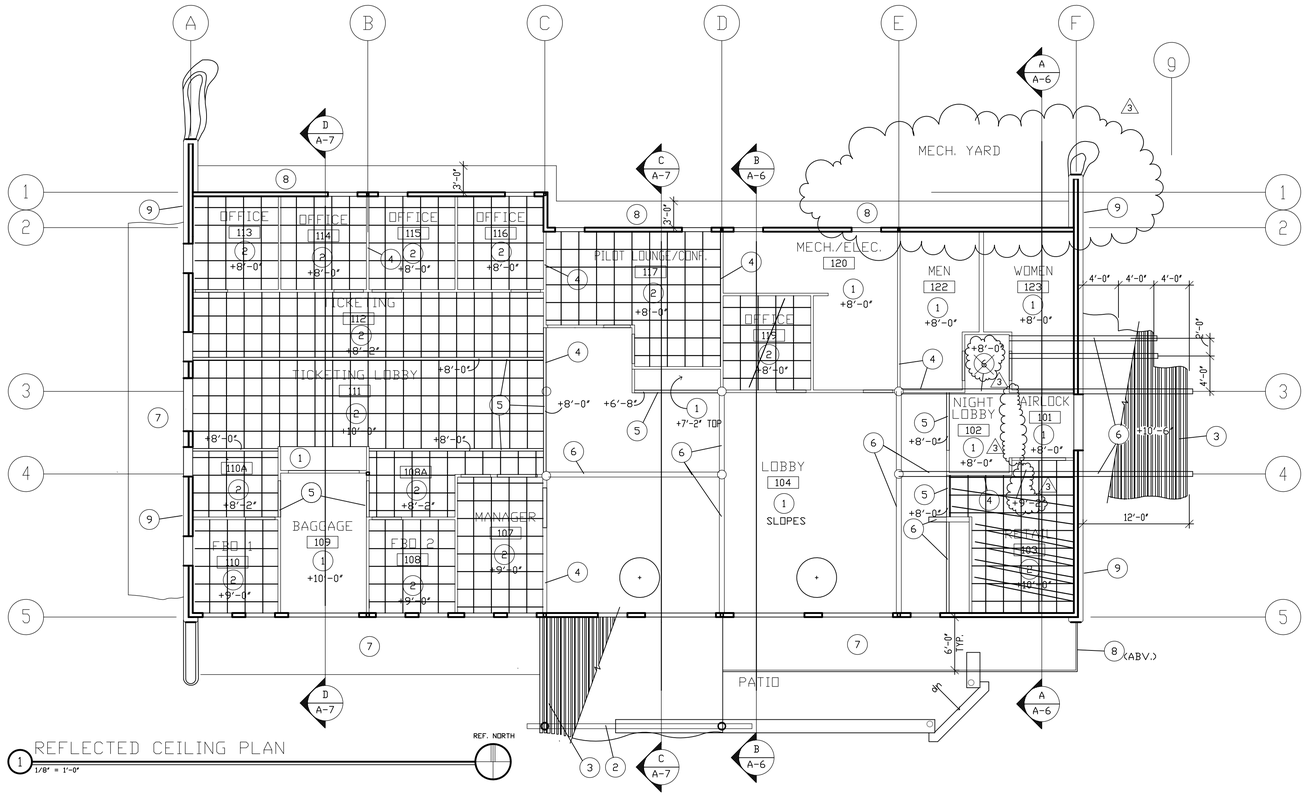

REFLECTED CEILING PLAN
1/8" = 1'-0"

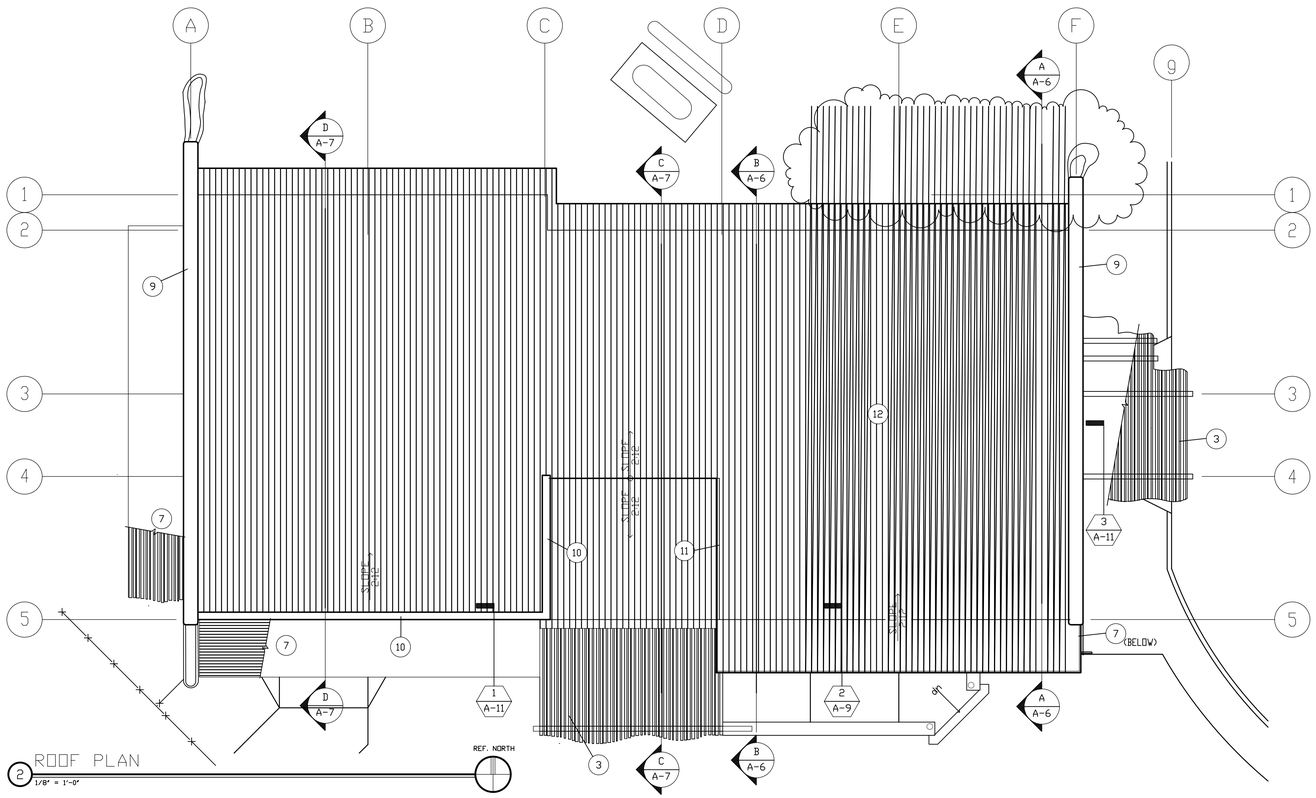

ROOF PLAN
1/8" = 1'-0"

KEYNOTES

1. 5/8" GYPSUM BOARD.
2. 2 X 2 ACOUSTICAL CEILING TILE SYSTEM.
3. LOGS SUPPORTED ON GLU-LAM BEAMS.
4. GLU-LAM BEAM CENTERED ON WALL BELOW.
5. GYPSUM BOARD BULKHEAD.
6. GLU-LAM BEAM, OPEN BELOW.
7. SHADE SCREEN. SEE DETAILS
8. 5/8" EXTERIOR GYPSUM BOARD SOFFIT.
9. SANDSTONE VENEER ON 2X6 FRAMING.
10. STUCCO (EIFS) PARAPET WALL.
11. STUCCO (EIFS) SIDE WALL.
12. CORRUGATED METAL ROOFING.

NOTES

REVISIONS:
3 6/1/00 AS-BUILTS

patrik davis associates, a.i.a.
architecture planning
245 so. cascade
montrose, co 81401
phone (970) 249-5404
fax (970) 249-2768

CanyonLands Field
Moab, Utah
BID PACKAGE #2 - REFLECTED CEILING PLAN & ROOF PLAN

DRAWN	
CHECKED	PD
DATE	10/26/98
DWG. #	A-CP.VWF
job no.	9713
sheet	A-3
# of sheets	

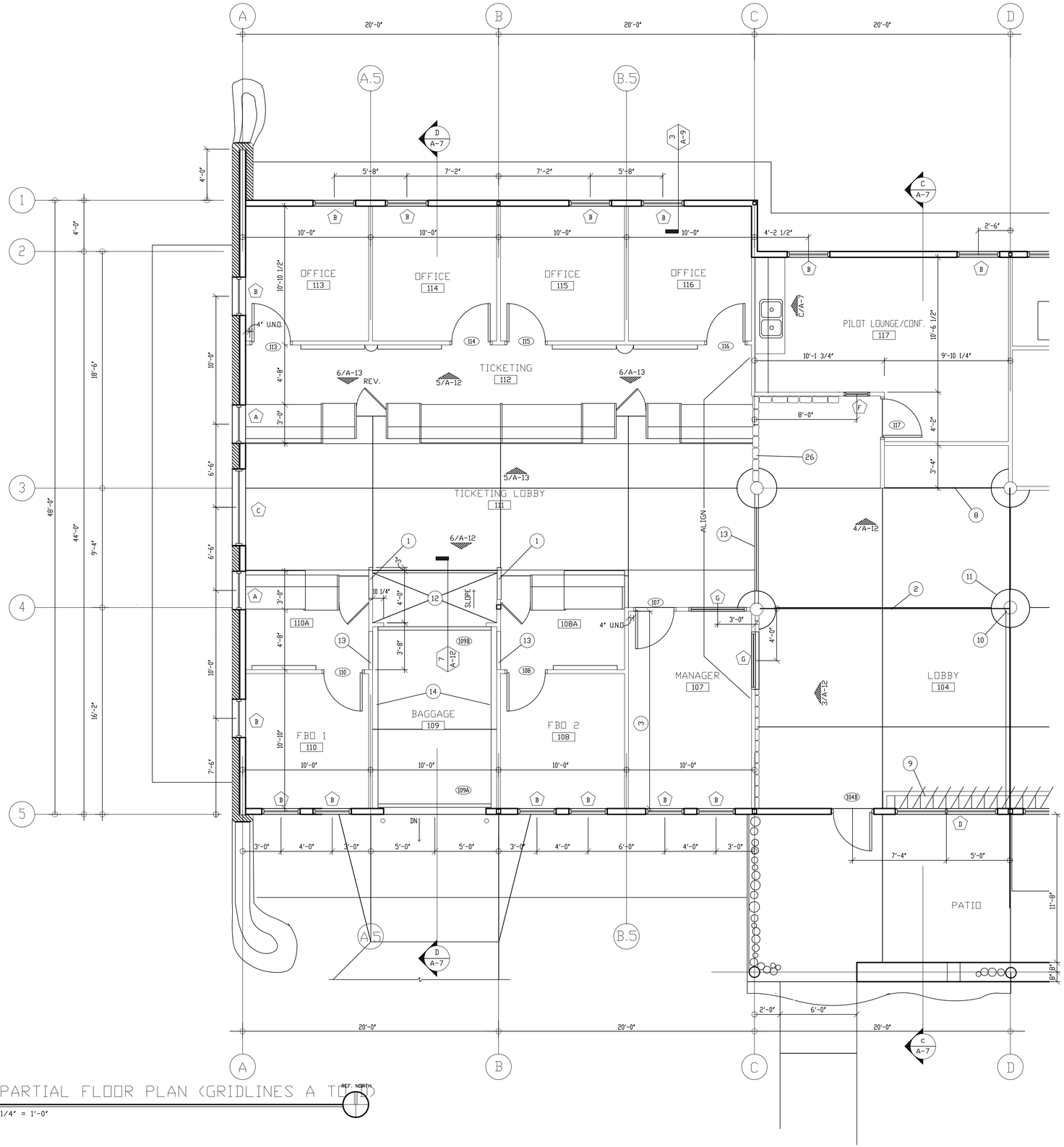

1 PARTIAL FLOOR PLAN (GRIDLINES A TO D)

1/4" = 1'-0"

KEYNOTES

1. SLOPING WALL. SEE 10/A-12.
2. CENTERLINE OF GLU-LAM BEAMS ABOVE.
3. SETPOINT: ℄ OF MANAGER 107 NORTH WALL = GRIDLINE 4 =℄ OF LOG COLUMN.
8. LINE OF PLANT SHELF ABOVE.
9. RAISED TILE LEDGE WITH LOG BORDER. SEE 2/A-9.
10. 12" DIAMETER LOG COLUMN. SEE 4/A-10.
11. 36" DIAMETER COLORED CONCRETE. SEE 4/A-10.
12. BAG CLAIM. SEE 10/A-12.
13. 2 X 4 BULKHEAD TO 8'-0" A.F.F.
14. CONTINUOUS OVERHEAD DOOR TRACK SHARED BY DOORS 109A AND 109B.
26. 2 X 8 WALL 4'-6" HIGH. 5/8" GYP. BOARD AND FLAGSTONE CAP. WALL COVERING BY OTHERS.

NOTES

REVISIONS:

patrik davis associates, a.i.a.
architecture planning
245 so. cascade
montrose, co 81401
phone (970) 249-5404
fax (970) 249-2768

Canyonlands Field
Moab, Utah

BID PACKAGE #2 - 1/4" PARTIAL FLOOR PLAN

DRAWN	
CHECKED	PD
DATE	10/26/98
DWG. #	A-FP2
job no.	9713
sheet	A-4
# of sheets	

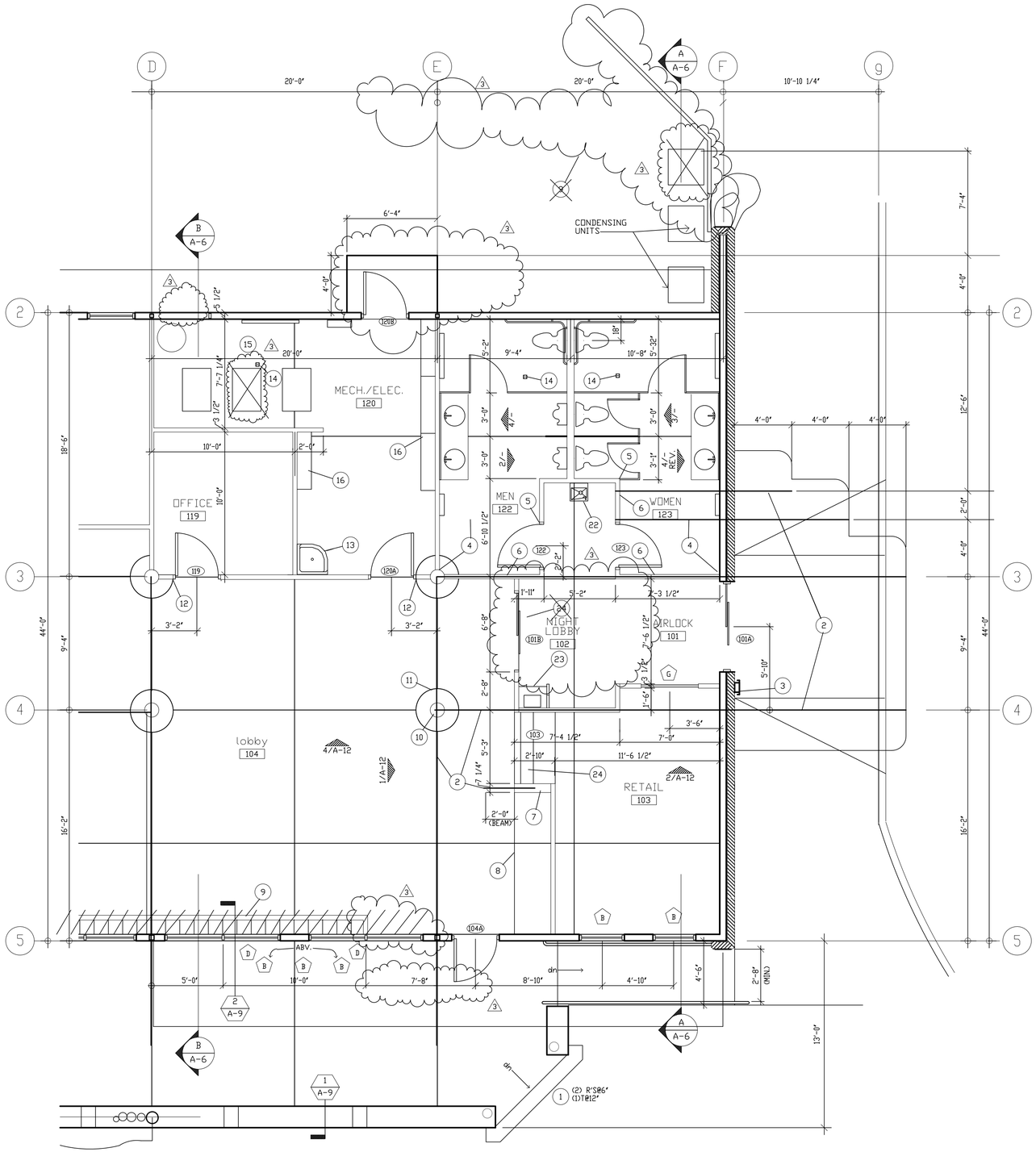

1 PARTIAL FLOOR PLAN - - GRIDLINES D TO G

1/4" = 1'-0"

REF. NORTH

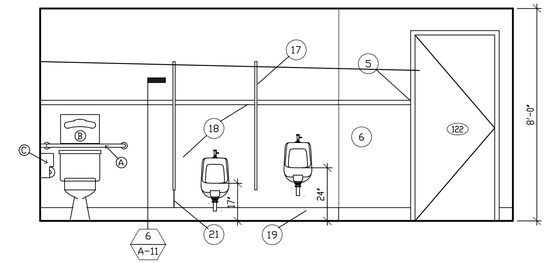

2 MEN'S 122 EAST

3/8" = 1'-0"

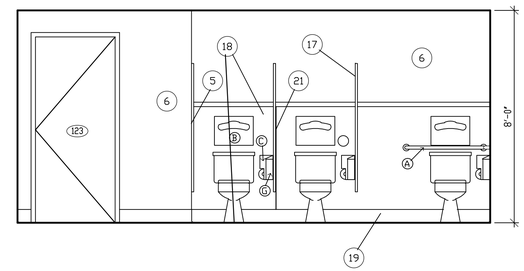

3 WOMEN'S 123 WEST

3/8"=1'-0"

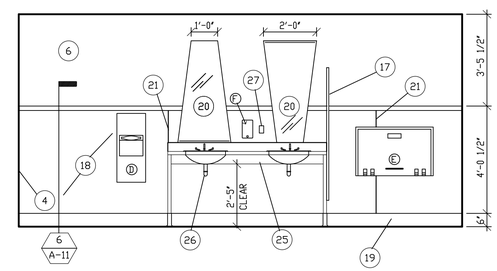

4 MEN'S 122 WEST (WOMEN'S 123 EAST, REVERSE)

3/8"=1'-0"

TOILET ACCESSORIES SCHEDULE

ICON PLAN	ICON ELEV.		DESCRIPT.	MANUFACT.	MODEL #	QUANTITY
		Ⓐ	GRAB BARS 36 X 54	bobrick	b-5637	2
		Ⓑ	TOIL. SEAT COVER	bobrick	b-3013	4
		Ⓒ	T.P. DISPENSER (SURF. MTD)	bobrick	b-288	4
		Ⓓ	PAPER TOWEL DISPENSER & DISPOSAL	bobrick	b-3944	2
		Ⓔ	BABY CHANGING STATION	KOALA	GS-28F-1001S	2
		Ⓕ	SOAP DISPENSER	BOBRICK	b-2111	2
		Ⓖ	SANITARY NAPKIN DISPOSAL	BOBRICK	B-270	3

KEYNOTES

1. CONCRETE STEPS TO FINISH GRADE.
2. CENTERLNE OF GLU-LAM BEAMS ABOVE.
3. METAL GRILLE (N.I.C.).
4. BEGIN FRP WANSCOT. CONT. TO (5) .
5. END FRP WAINSCOT.
6. 5/8" MOISTURE-RESISTANT GYPBD.
7. 2X8 FINWALL.
8. LINE OF PLANT SHELF ABOVE.
9. RAISED TILE LEDGE W/ LOG BORDER. SEE 2/A-9..
10. 12"ϕ LOG COLUMN. SEE 3/A-10.
11. 36"ϕ COLORED CONCRETE. SEE 3/A-10.
12. SETPOINT: OUTSIDE EDGE OF HM DOOR FRAME = OUTSIDE EDGE OF EXPANSION MATERIAL AROUND 36"ϕ CONCRETE CIRCLE.
13. MOP SINK.
14. FLOOR DRAIN.
15. MECH/ELEC EQUIPMENT. SEE DRAWINGS.
16. (4) 4"W X 12"D ADJUSTABLE SHELVING UNITS. 5 SHELVES EACH SECTION. SCREEN MOULD ON LEADING EDGE. PAINT.
17. STEEL TOILET COMPARTMENTS.
18. FRP WAINSCOT W/ MAPLE TRIM CAP. SEE 6/A-11.
19. 6"H RUBBER COVE BASE.
20. 2'-0" X 4'-0" MIRROR TAPERED TO 1'-0".
21. FRP JOINT. COVER W/ STANDARD PLASTIC TRIM.
22. DRINKING FOUNTAIN.
23. PAY TELEPHONE & TELEPHONE ENCLOSURE (N.I.C.). 3
24. ~~OVERHEAD COILING GRILLE.~~
25. PLASTIC LAMINATE #3 SKIRT.
26. TRUEBRO MODEL 103 PIPE WRAP, OR EQUAL.
27. GFI ELECTRICAL OUTLET. COORD. PLACEMENT W/ SOAP DISPENSER, AS SHOWN.

NOTES

REVISIONS:

3 6/1/00 AS-BUILTS

patrik davis associates, a.i.a.
architecture planning
245 so. cascade
montrose, co 81401
phone (970) 249-5404
fax (970) 249-2768

Canyonlands Field
Moab, Utah

BID PACKAGE #2 - 1/4" PARTIAL FLOOR PLANS & TOILET ELEVATIONS

DRAWN	
CHECKED	PD
DATE	10/26/98
DWG. #	A-FP3
job no.	9713
sheet	A-5
# of sheets	

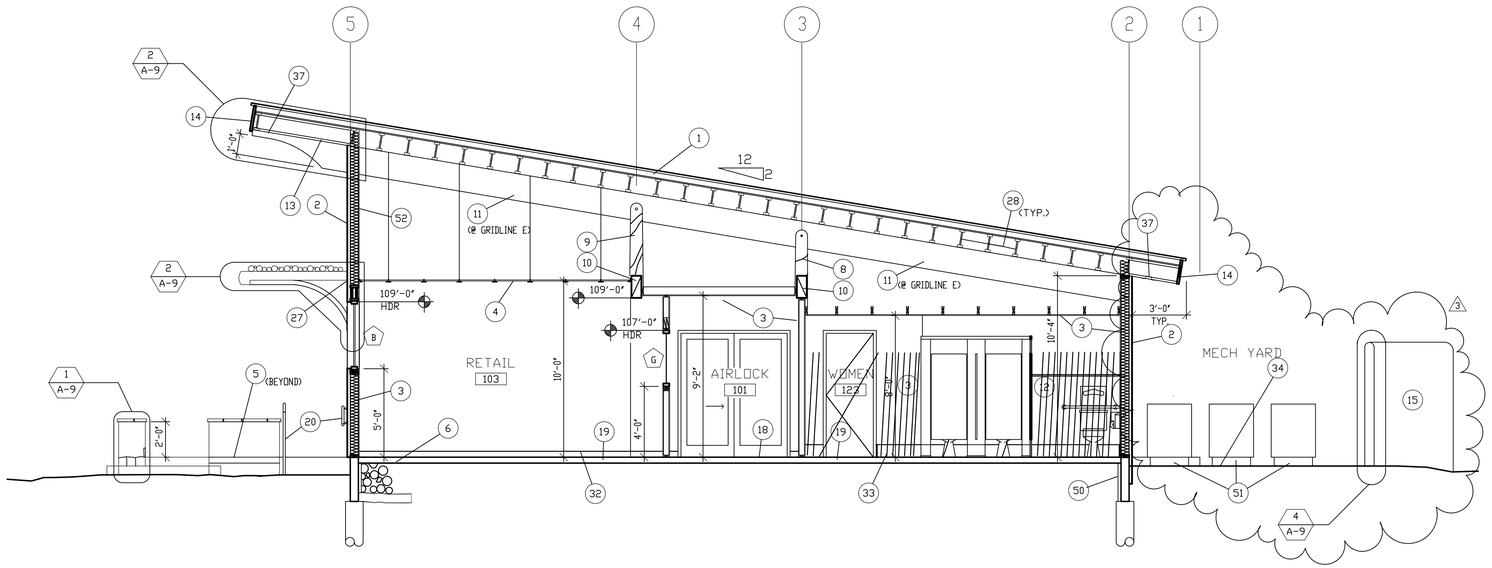

BUILDING SECTION

A

1/4" = 1'-0"

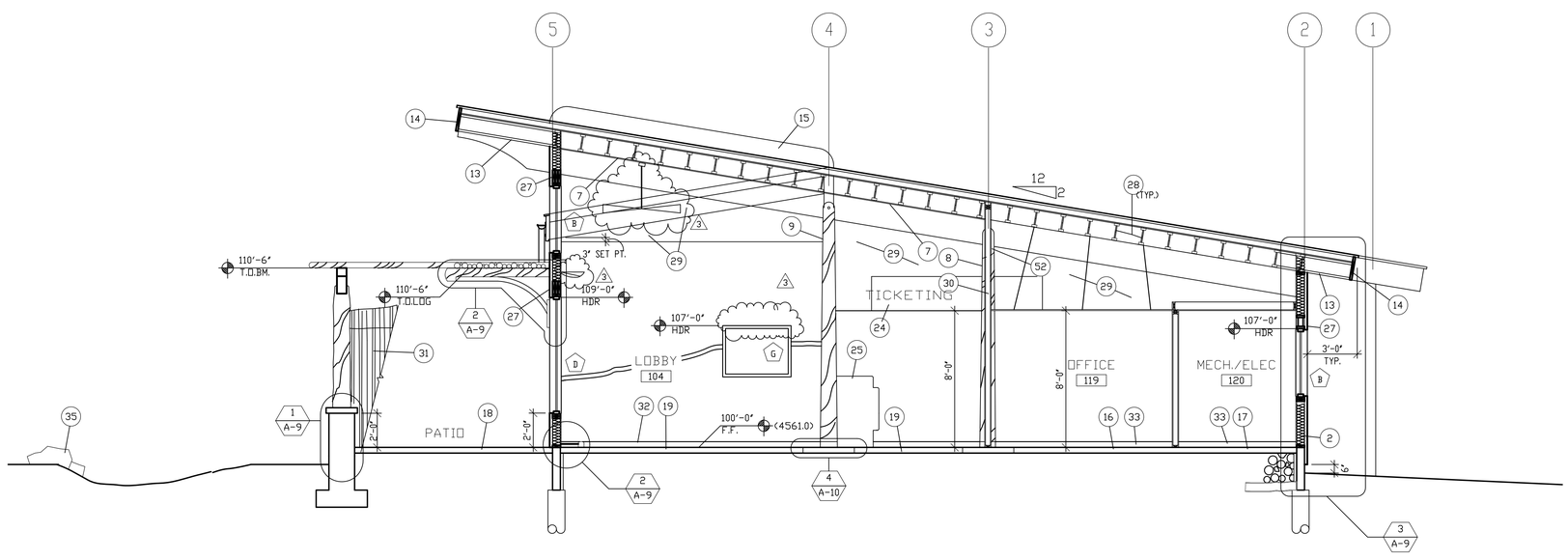

BUILDING SECTION

B

1/4" = 1'-0"

KEYNOTES

1. CORRUGATED METAL ROOFING ON 3 1/2" RIGID INSULATION ON WAFERBD. SHEATHING ON 11 7/8" TJI'S SPANNING BETWEEN 6 3/4" X 18" GLU-LAM BEAMS AT 20'-0" O.C.
2. STUCCO (EIFS) ON 1 1/2" FOAM BOARD (EPS) OVER 2X6 FRAMING WITH R-19 MIN. FIBERGLASS BATT OR BLOWN CELLULOSE INSULATION AND 5/8" GYPSUM BOARD.
3. 5/8" GYPSUM BOARD ON WOOD FRAMING.
4. ACOUSTICAL CEILING SYSTEM. SUSPEND GRID FROM STRUCTURE.
5. STUCCO (EIFS) ON 2 X 4 FRAMING 1'-2" WIDE WITH FLAGSTONE CAP. SEE DETAIL.
6. CONCRETE SLAB ON STRUCTURAL FILL.
7. 5/8" GYPSUM BOARD CEILING.
8. 12" DIA. LOG COLUMN BEYOND. 1 OF 3 ON GRIDLINE 3.
9. 12" DIA. LOG COLUMN BEYOND. 1 OF 3 ON GRIDLINE 4.
10. 6 3/4" X 18" GLU-LAM BEAM CANTILEVERED TO FORM EXTERIOR ENTRY CANOPY. BACK-SPAN TO (8) AND (9) BEYOND.
11. 6 3/4" X 18" GLU-LAM BEAM. OPEN BELOW.
12. FRP PANELS TO 6'-0" AFF WITH WOOD CAP. SEE DETAIL.
13. 1/2" EXTERIOR GYPSUM BOARD SOFFIT.
14. PLYWOOD FASCIA, WRAPPED WITH GALVANIZED SHEET METAL. SEE DETAIL.
15. STUCCO (EIFS) WALL BEYOND.
16. CARPET.
17. STANDARD INTERIOR CONCRETE SLAB WITH CLEAR SEALER.
18. COLORED CONCRETE WITH SCORED JOINTS AND BROOM FINISH.
19. GROUND-FACE EXPOSED AGGREGATE SLAB WITH CLEAR SEALER.
20. 1 1/2" DIA. METAL HANDRAIL.
24. 6" HIGH METAL LETTERS.
25. END OF TICKET COUNTER BEYOND.
27. 1 X 10 ROUGH SAWN CEDAR. EXTEND BEYOND WINDOW FRAME 3'-10" WITH ROUGH CUT AND HAMMERED ENDS.
28. REMOVE ALL VENT HOLE KNOCK-OUTS IN TJI'S (TYPICAL).
29. 2 x 4 BULKHEAD CENTERED UNDER 6 3/4" X 18" GLU-LAM AT GRIDLINE D BULKHEAD SETPOINT: 3" BELOW CEILING LINE BEYOND. SEE C/A-7.
30. FULL HEIGHT WALL CENTERED ON LOG COLUMNS ALONG GRIDLINE 3.
31. 1" - 2" DIA. PEELED AND UNPEELED LOGS 7'-0" HIGH. NAIL TO (2) REDWOOD 2 X 6 HORIZONTALS. HOLD LOGS UP 2" ABOVE DECK. AND 6" ABOVE GRADE.
32. 1 X 4 D PINE BASE WITH 1/2" RADIUS AT TOP EDGE. STAIN.
33. 4" RUBBER COVE BASE.
34. GRAVEL LAYER 1 1/2" THICK.
35. EMBED EXISTING BOULDERS AND OLD TERMINAL STONE CLADDING INTO NEW SWALE. SEE SITE PLAN.
36. 5 1/8" X 12" GLU-LAM BEAM.
37. METAL VENT STRIP (CONT.) IN GYPSUM BOARD SOFFIT.
50. 2" CLOSED CELL INSULATION BOARD ON INSIDE FACE OF GRADE BEAM AT PERIMETER OF BLDG.
51. CONCRETE PADS MIN. 6" ABOVE GRADE.
52. CARRY GYPSUM BOARD TO TOP PLATE (TYP.). NOTE: PROVIDING FIRESTOPPING AT DROP CEILING LINE IS AN ACCEPTABLE ALTERNATE.

NOTES

REVISIONS:

3 6/1/00 AS-BUILTS

patrik davis associates, a.i.a.
architecture planning
245 so. cascade
montrose, co 81401
phone (970) 249-5404
fax (970) 249-2768

CanyonLands Field
Moab, Utah

BID PACKAGE #2 - BUILDING SECTIONS

DRAWN	
CHECKED	PD
DATE	10/26/98
DWG. #	A-BS2
job no.	9713
sheet	A-6
# of sheets	

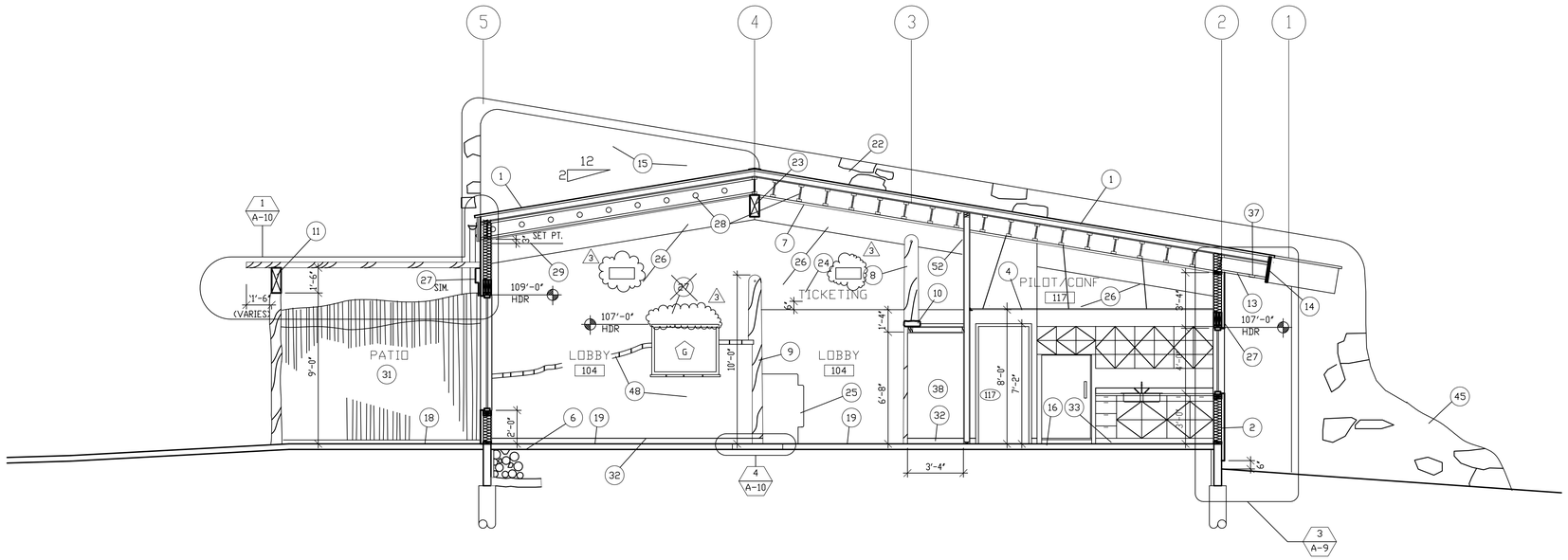

C BUILDING SECTION

1/4" = 1'-0"

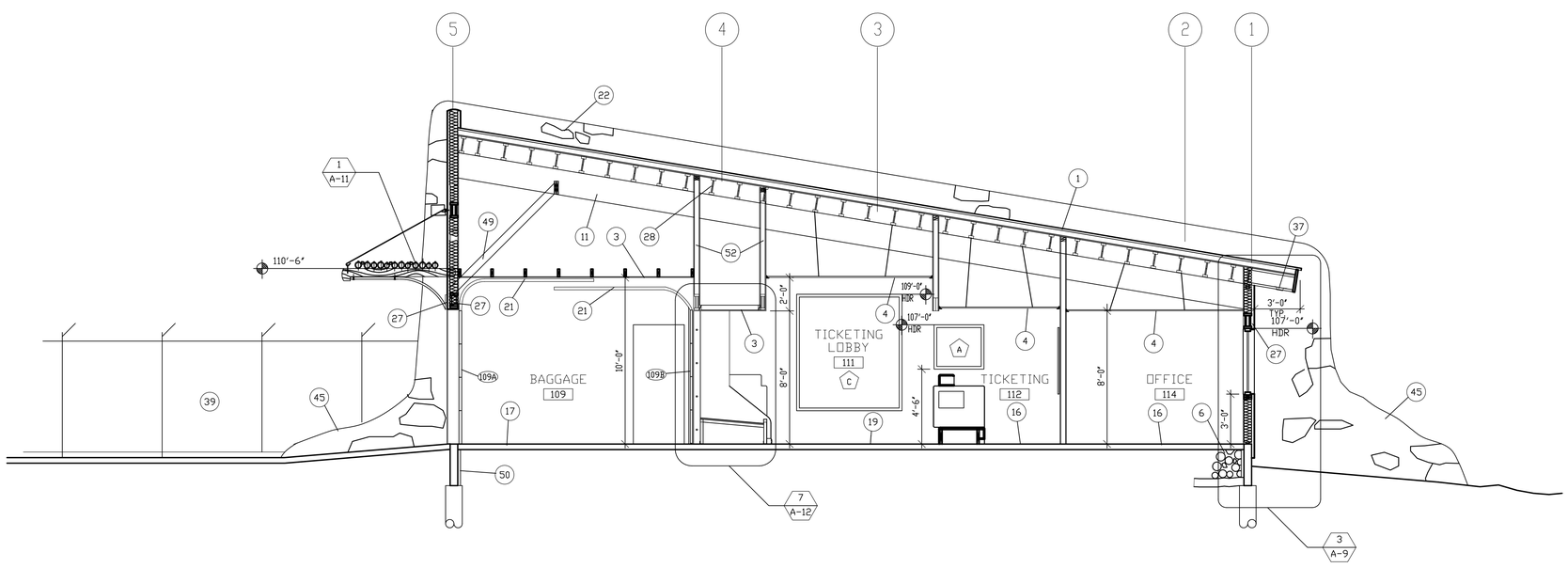

D BUILDING SECTION

1/4" = 1'-0"

KEYNOTES

1. CORRUGATED METAL ROOFING ON 3 1/2" RIGID INSULATION ON WAFERBD. SHEATHING ON 11 7/8" TJI'S SPANNING BETWEEN 6 3/4" X 18" GLU-LAM BEAMS AT 20'-0" O.C.
2. STUCCO (EIFS) ON 1 1/2" FOAM BOARD (EPS) OVER 2X6 FRAMING WITH R-19 MIN. FIBERGLASS BATT OR BLOWN CELLULOSE INSULATION AND 5/8" GYPSUM BOARD.
3. 5/8" GYPSUM BOARD ON WOOD FRAMING.
4. ACOUSTICAL CEILING SYSTEM. SUSPEND GRID FROM STRUCTURE.
6. CONCRETE SLAB ON STRUCTURAL FILL.
7. 5/8" GYPSUM BOARD CEILING.
8. 12" DIA. LOG COLUMN BEYOND. 1 OF 3 ON GRIDLINE 3.
10. 2 1/2" - 3" THICK SANDSTONE FLAGSTONE CAP. SET IN MORTAR BED ON 20# BLDG. PAPER NAILED TO FRAMING.
9. 12" DIA. LOG COLUMN BEYOND. 1 OF 3 ON GRIDLINE 4.
11. 6 3/4" X 18" GLU-LAM BEAM. OPEN BELOW,
13. 5/8" EXTERIOR GYPSUM BOARD SOFFIT. (3)
14. PLYWOOD FASCIA, WRAPPED WITH GALVANIZED SHEET METAL. SEE DETAIL.
15. STUCCO (EIFS) WALL BEYOND.
16. CARPET.
17. STANDARD INTERIIOR CONCRETE SLAB WITH CLEAR SEALER.
18. COLORED CONCRETE WITH SCORED JOINTS AND BROOM FINISH.
19. GROUND-FACE EXPOSED AGGREGATE SLAB WITH CLEAR SEALER.
21. OVERHEAD DOOR TRACKS OVERLAP. MOUNT DOOR 109A TRACK ABOVE DOOR 109B TRACK.
22. SANDSTONE VENEER WALL BEYOND.
23. 6 3/4" X 15" GLU-LAM BEAM.
24. 6" HIGH METAL LETTERS.
25. END OF TICKET COUNTER BEYOND.
26. 2 X 4 WALL CENTERED ON 6 3/4" X 18" GLU-LAM BEAM ABOVE. AT GRIDLINE C BEYOND.
27. 1 X 10 ROUGH SAWN CEDAR. EXTEND BEYOND WINDOW FRAME 3"-6" WITH ROUGH CUT AND HAMMERED ENDS.
28. REMOVE ALL VENT HOLE KNOCK-OUTS IN TJI'S (TYP.)
29. 2 x 4 BULKHEAD CENTERED UNDER 6 3/4" X 18" GLU-LAM AT GRIDLINE D BULKHEAD SETPOINT: 3" BELOW CEILING LINE BEYOND. SEE C/A-
32. 1 X 4 D PINE BASE WITH 1/2" RADIUS AT TOP EDGE. STAIN.
33. 4" RUBBER COVE BASE.
37. METAL VENT STRIP (CONT.) IN GYPSUM BOARD SOFFIT.
38. VENDING ALCOVE. SEE DETAIL.
39. EXISTING CHAIN LINK FENCE TO REMAIN.
45. SANDSTONE RUBBLE BASE.
48. DOUBLE 2 X 4 WALL. WALL ON GRIDLINE C , SEE (26) . SECOND 2 X 4 WALL SCABBED ON LOBBY 104 SIDE. VARY PLATE HEIGHT FROM 3'-6" TO 6'-0" AFF FOR FLAGSTONE LEDGE. SEE C/A-7. 5/8" GYPSUM BOARD, FULL HEIGHT. WALL COVERING BY OTHERS ON LOWER SCABBED WALL.
49. PROVIDE 2 X 6 BRACE (2 PER LOG SUPPORT) AT EACH PAIR OF 2 X 6 STUDS. EXTEND TO GLU-LAM BEAM AND NAIL TO (2) 2 X 10'S. USE (6) - 120 NAILS. AT ALL LOCATIONS. VERIFY BRACING IS LOCATED ABOVE THE FINISHED CEILING. SEE 1/A-11 FOR FURTHER DETAIL.
50. 2" CLOSED CELL INSULATION BOARD ON INSIDE FACE OF GRADE BEAM AT PERIMETER OF BLDG.
52. CARRY GYPSUM BOARD TO TOP PLATE (TYP.). NOTE: PROVIDING FIRESTOPPING AT DROP CEILING LINE IS AN ACCEPTABLE ALTERNATE.

NOTES

REVISIONS:

3 6/1/00 AS-BUILTS

patrik davis associates, a.i.a.
architecture planning
245 so. cascade
montrose, co 81401
phone (970) 249-5404
fax (970) 249-2768

CanyonLands Field
Moab, Utah

BID PACKAGE #2 - BUILDING SECTIONS

DRAWN	
CHECKED	PD
DATE	10/26/98
DWG. #	A-BS2
job no.	9713
sheet	A-7
# of sheets	

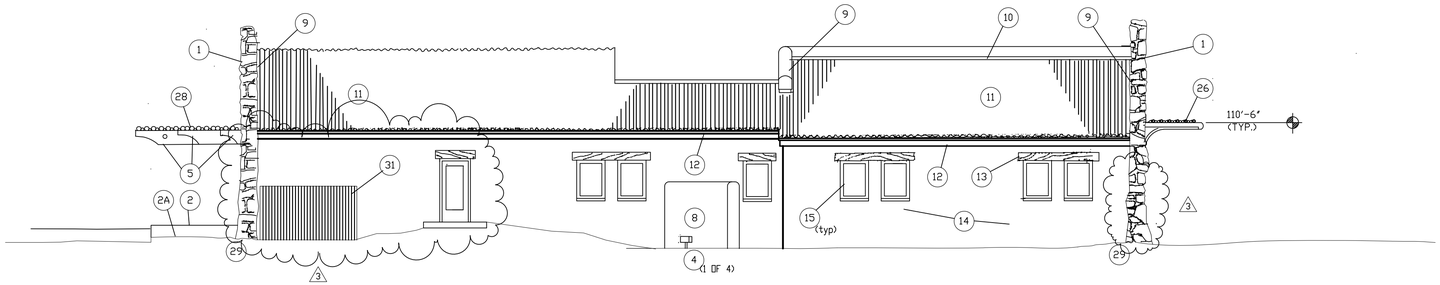

1 TERMINAL - NORTH ELEVATION
1/8" = 1'-0"

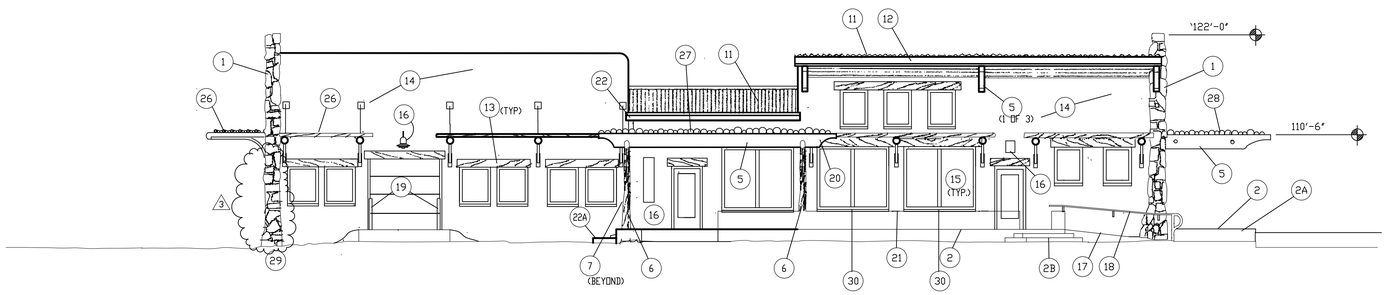

2 TERMINAL - SOUTH ELEVATION
1/8" = 1'-0"

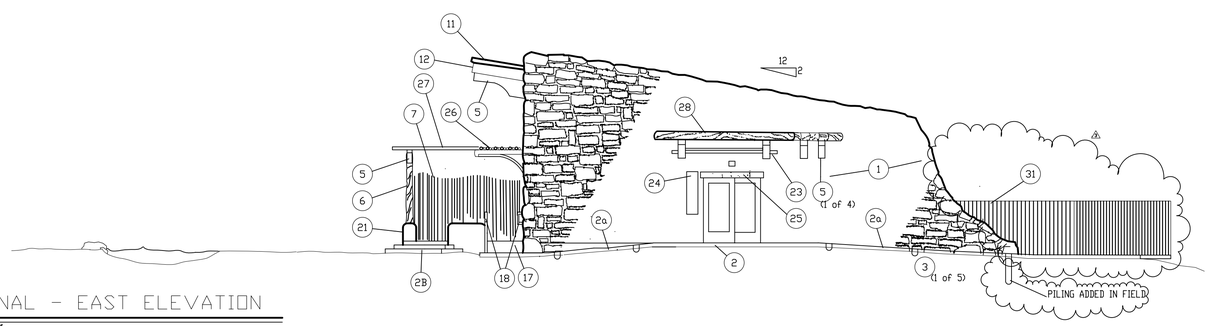

3 TERMINAL - EAST ELEVATION
1/8" = 1'-0"

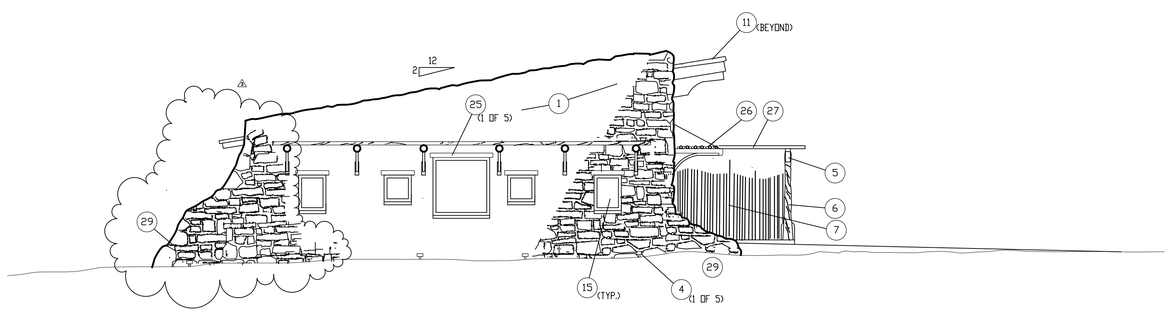

4 TERMINAL - WEST ELEVATION
1/8" = 1'-0"

KEYNOTES

1. SANDSTONE VENEER ENDWALL ON 2X6 FRAMING.
2. COLORED CONCRETE PAD WITH BROOM FINISH AND SCORED JOINTS.
2A. CONCRETE SIDEWALK W/BROOM FINISH AND SCORED JOINTS.
2B. COLORED CONCRETE RISERS AND TREADS. BROOM FINISH.
3. LIGHT FIXTURE RECESSED IN SIDEWALK. SEE ELECRICAL.
4. GROUND-MOUNTED LIGHT FIXTURE. SEE ELECTRICAL.
5. GLU-LAM BEAM.
6. 12" DIAMETER LOG COLUMN.
7. 1'-2" DIA. PEELED AND UNPEELED LOGS '7'-0" HIGH. NAIL TO (2) REDWOOD 2X6 HORIZONTALS. HOLD LOGS UP 2" ABOVE CONCRETE DECK AND 6" ABOVE GRADE.
8. 1 1/2" EIFS ALL AROUND ON 2X4 FRAMING. 1'-4" WIDE AND 7'-0" HIGH PROPANE TANK SCREEN WALL.
9. JUNCTURE OF METAL ROOFING AND WALL. MANUFACTURER'S STANDARD RAKEWALL DETAIL.
10. JUNCTURE OF METAL ROOFING AND EIFS WALL. MANUFACTURER'S STANDARD HEADWALL DETAIL.
11. GALVANIZED METAL ROOFING.
12. GALVANIZED SHEET METAL FASCIA, SEE DETAIL.
13. 1X10 R.S. CEDAR. EXTEND BEYOND WINDOW FRAMES 3"-6", WITH ROUGH CUT AND HAMMERED ENDS.
14. 1 1/2" EIFS ON 2X6 FRAMING.
15. FIXED TINTED INSULATED GLASS IN ALUMINUM FRAME.
16. LIGHT FIXTURE. SEE DETAIL AND ELECTRICAL.
17. 1:12 COLORED CONCRETE RAMP WITH BROOM FINISH AND SCORED JOINTS.
18. 1 1/2" DIAMETER STEEL HANDRAIL MOUNTED 36" ABOVE RAMP SURFACE. 1 1/2" MINIMUM SPACE BETWEEN WALLS AND HANDRAILS.
19. 42" HIGH X 4" DIA. STEEL CONCRETE-FILLED BOLLARDS. INSTALL 2" INSIDE CLEAR OPENING (EACH SIDE) AND 4" AWAY FROM WALL.
20. BEAM END EXTENDS 2'-6" BEYOND COLUMN.
21. 2'-0" HIGH PATIO WALL LINE BEYOND.
22. GALVANIZED GUTTER AND DOWNSPOUT.
22A. DAYLIGHT DOWNSPOUT OUT THE SIDE OF CONCRETE PATIO INTO CONCRETE SPLASH BLOCK.
23. COPPER PIPE EXTENDED THROUGH GLU-LAM CANOPY BEAMS. SEE DETAIL.
24. METAL GRILLE (N.I.C.).
25. STONE LINTEL.
26. 1" - 6" DIA. PEELED AND UNPEELED LOGS. SEE DETAIL.
27. 3" - 6" DIA. PEELED AND UNPEELED LOGS. SEE DETAIL.
28. 6" DIA. PEELED AND UNPEELED LOGS. SEE DETAIL.
29. RUBBLE STONE BASE AT 3 OF 4 BUILDING CORNERS.
30. CENTER WINDOWS ABV. ON WINDOWS BELOW.
31. WOOD FENCING.

NOTES

1. SHADE SCREENS ON SOUTH, EAST AND WEST ELEVATIONS (26) ARE SHOWN 6" LOWER THAN ON THE DETAILS. FOLLOW THE DETAIL.

REVISIONS:
3 6/1/00 AS-BUILTS

patrik davis associates, a.i.a.
architecture planning
245 so. cascade
montrose, co 81401
phone (970) 249-5404
fax (970) 249-2768

Canyonlands Field
Moab, Utah
BID PACKAGE #2 - EXTERIOR ELEVATIONS

DRAWN	
CHECKED	
DATE	10/26/98
DWG. #	A-EL1&2
job no.	9713
sheet	A-8
# of sheets	

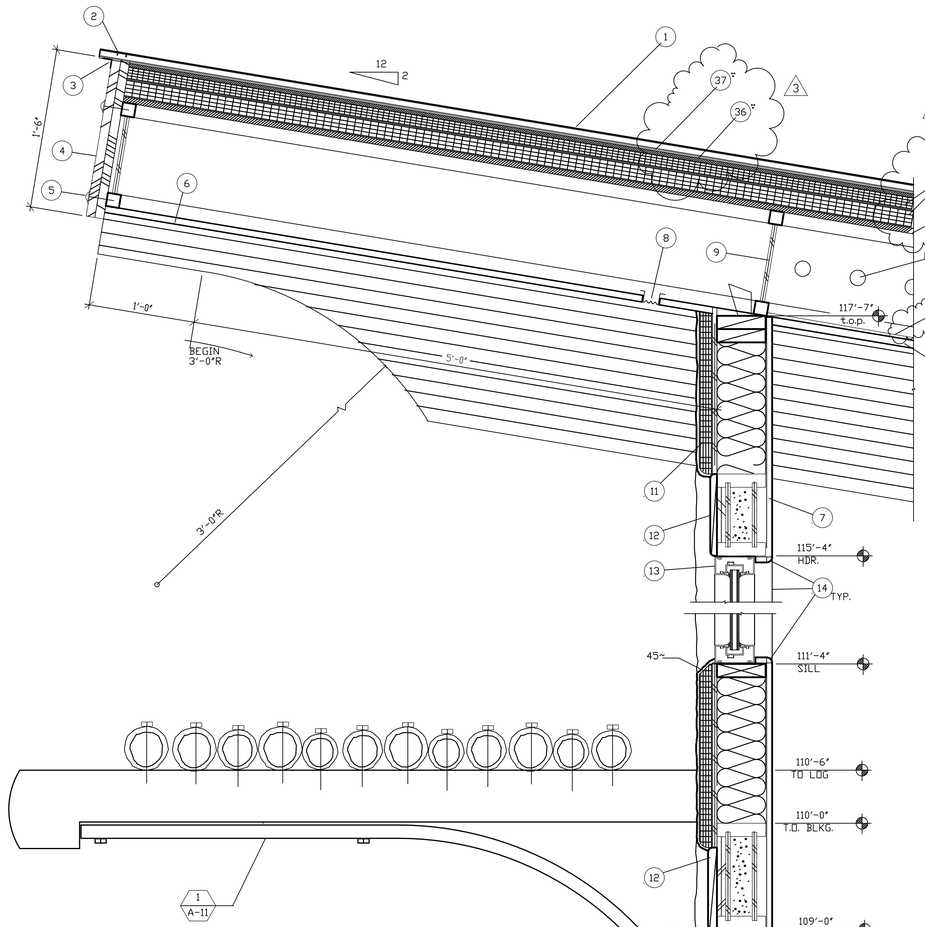

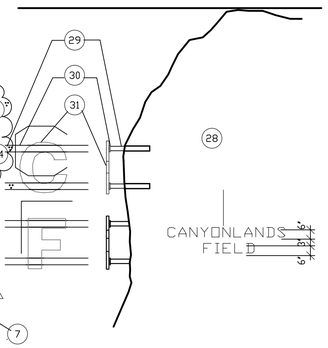

5 SIGNAGE @ ENTRY ISLAND
1 1/2"=1'-0"

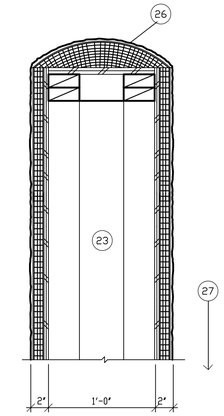

4 PROPANE SCREEN WALL
1 1/2"=1'-0"

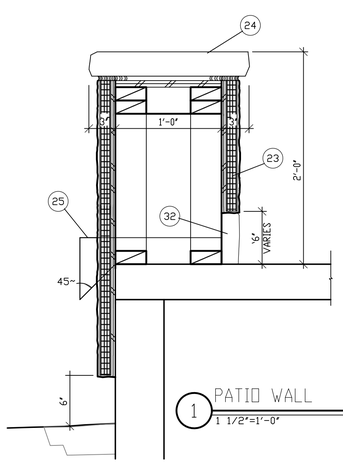

1 PATIO WALL
1 1/2"=1'-0"

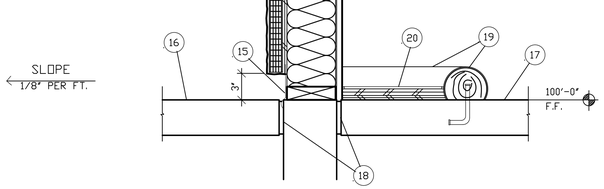

2 SOUTH WALL AT LOBBY
1 1/2"=1'-0"

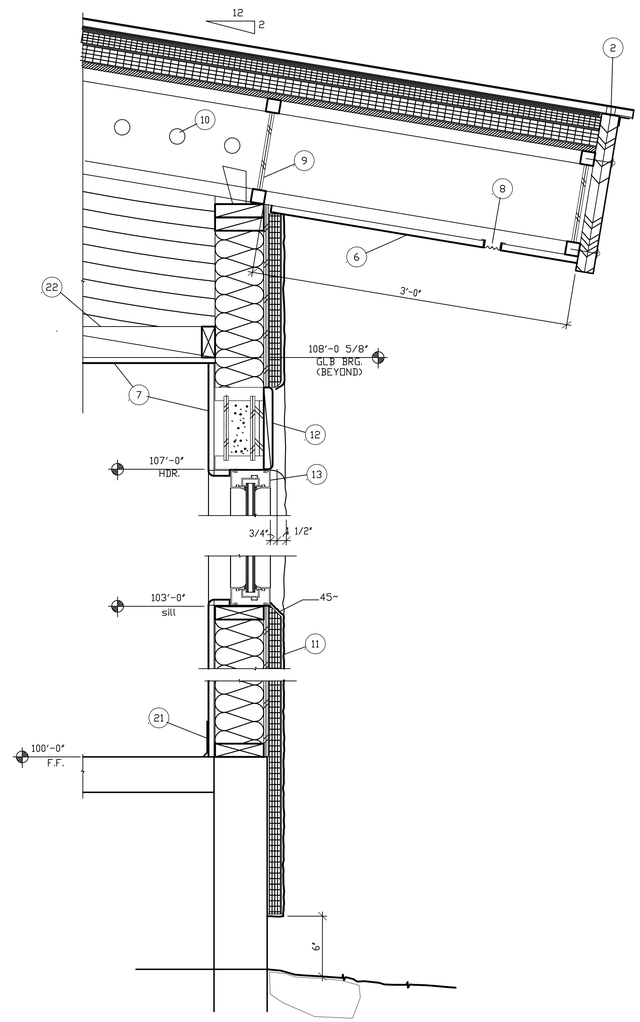

3 NORTH WALL @ WINDOW
1 1/2"=1'-0"

KEYNOTES

1. 7/8" HIGH CORRUGATED METAL ROOFING.
2. NEOPRENE CLOSER STRIP IN CORRUGATIONS (CONTINUOUS).
3. STANDARD GALVANIZED DRIP EDGE (CONTINUOUS).
4. FASCIA BOARD. GALVANIZED SHEET METAL WRAPPED AROUND (2) 3/4" PLYWD., 18" HIGH X 10'-0" LONG.
5. ROUND-HEAD WOOD SCREWS, 3" AWAY FROM FASCIA BOARD JOINTS, & EVENLY SPACED 2'-0" O.C. IN BETWEEN.
6. 1/2" EXTERIOR GYPBD.
7. 5/8" GYPBD.
8. METAL DRYWALL SOFFIT VENT (CONT.).
9. TJI BLOCKING PANEL (TYP.).
10. REMOVE ALL VENT HOLE KNOCK-OUTS IN TJI'S (TYP.).
11. STUCCO (EIFS) ON 1 1/2" FOAM BOARD (EPS) OVER 1/2" EXTERIOR GYPBD. ON 2X6 FRAMING W/ R-19 MIN. FIBERGLASS BATT OR BLOWN CELLULOSE INSULATION & 5/8" GYPBD.
12. 1 X 10 ROUGH-SAWN CEDAR ON 9 1/4" FOAM HEADER PACK W/ PLYWD. BLOCKING.
13. ALUMINUM WINDOW W/ TINTED GLAZING.
14. 5/8" RADIUS BULLNOSE CORNERS, ALL AROUND WINDOW OPENINGS.
15. 4"H GALVANIZED BASE FLASHING. ATTACH TO SOUTH WALL AT LOBBY & EMBED IN EXPANSION MATERIAL. ATTACH TO SOUTH PATIO WALL & EMBED INTO SAW CUT JOINT IN PATIO SLAB. CONT. CAULK @ BOTH LOCATIONS.
16. COLORED EXTERIOR CONCRETE W/ SCORED JOINTS & BROOM FINISH.
17. GROUND-FACE EXPOSED AGGREGATE CONCRETE W/ SCORED JOINTS & CLEAR SEALER.
18. 1/2" EXPANSION MATERIAL.
19. 4"I PEELED LOG BORDER SET ON ANCHOR BOLTS @ 4'-0" O.C. APPLY ADHESIVE TO FLAT BOTTOM OF LOG & ANCHOR BOLTS. MITER CUT (2) OUTSIDE CORNERS.
20. 12" CERAMIC TILE SET ON (2) LAYERS 3/4" PLYWD.
21. 4" RUBBER COVE BASE.
22. DROP CEILING FRAMING.
23. STUCCO (EIFS) ON 1 1/2" FOAM BOARD (EPS) & 1/2" EXTERIOR GYPBD. ON BOTH SIDES, ON DOUBLE 2X4 FRAMING.
24. 2 1/2"-3" THICK SANDSTONE FLAGSTONE CAP. SET IN MORTAR BED ON 20# BLDG. PAPER NAILED TO 5/8" PLYWD.
25. GALVANIZED HEMMED SCUPPER BEYOND (1 OF 3). EXTEND 4" PAST CONCRETE.
26. RASP ESP FOAM TO ROLL TOP OF WALL.
27. TERMINATE EIFS 6" ABOVE GRADE.
28. BOULDERS EMBEDDED IN ENTRY ISLAND. SEE A-1.20 .
29. #3 BARS DOWELED INTO HOLES IN BOULDER. EPOXY.
30. 3/4" HIGH X 1/8" THICK STEEL STRIPS WELDED TO DOWELS.
31. 6"H ROUGH-CUT STEEL LETTERS WELDED TO STEEL STRIPS. LETTERING STYLE: HELVETICA BOLD.
32. 6"H X 2 1/2" - 3" THICK SANDSTONE FLAGSTONE. EIFS CONT. TO IRREGULAR TOPS OF FLAGSTONES.
33. 4 MIL. VAPOR RETARDER.
34. 7/16" OSB.
35. RIGID INSULATION.
36. 3/4" PLYWOOD OR OSB SHEATHING.
37. 60 MIL. BITUTHANE ULTRA MEMBRANE.

NOTES

1. SEE STRUCTURAL DRAWINGS FOR FOUNDATION CONDITIONS.

REVISIONS:
3 6/1/00 AS-BUILTS

patrik davis associates, a.i.a.
architecture planning
245 so. cascade
montrose, co 81401
phone (970) 249-5404
fax (970) 249-2768

Canyonlands Field
Moab, Utah
BID PACKAGE #2 - DETAILS
DETAILS

DRAWN	
CHECKED	PD
DATE	10/26/98
DWG. #	A-DT3.VWF
job no.	9713
sheet	A-9
# of sheets	

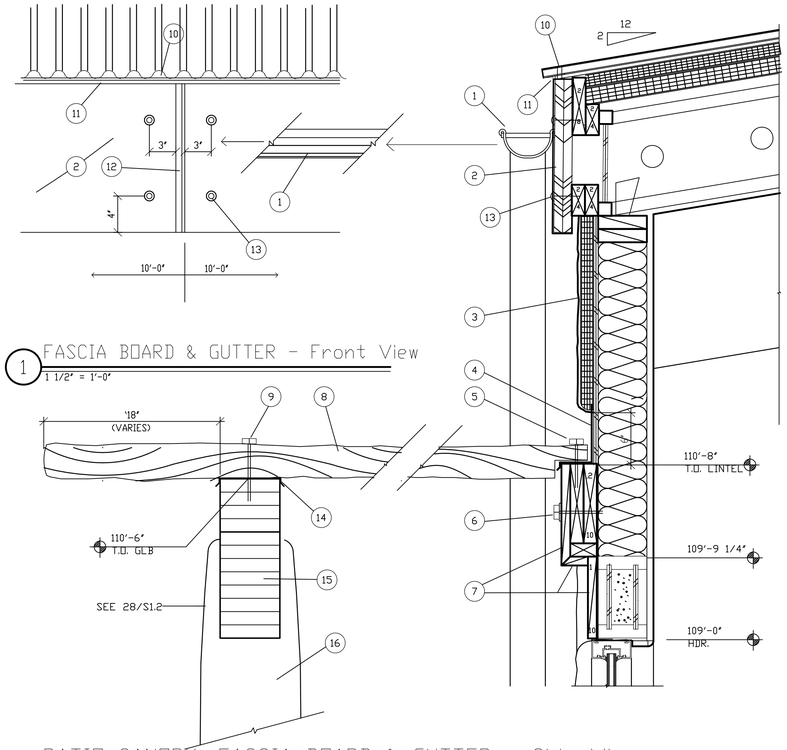

1 FASCIA BOARD & GUTTER - Front View
1 1/2" = 1'-0"

1 PATIO CANOPY, FASCIA BOARD & GUTTER - Side View
1 1/2" = 1'-0"

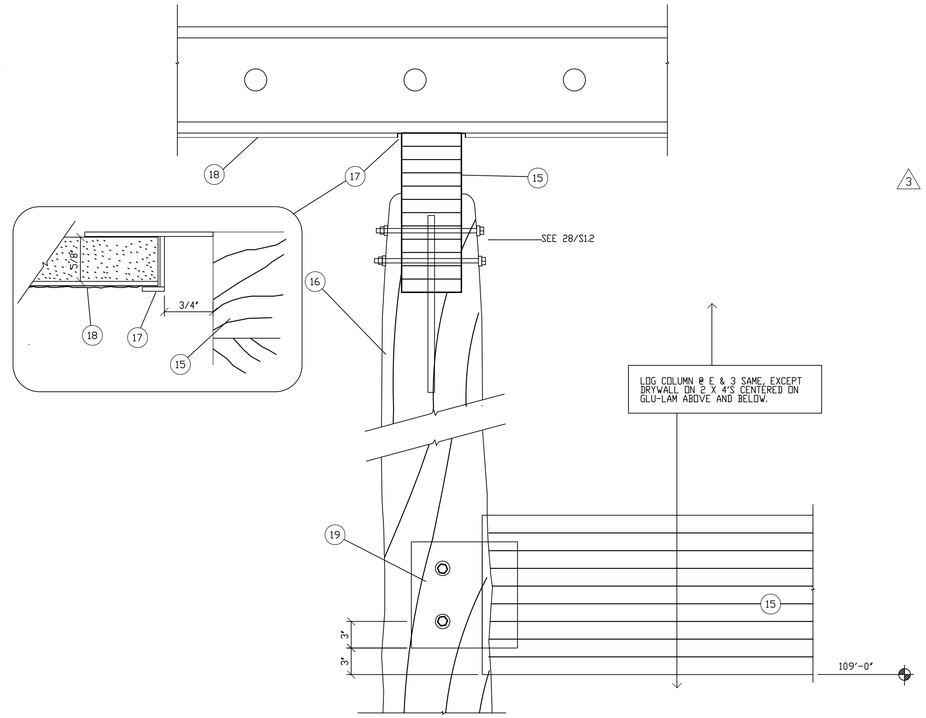

2 LOG COLUMN @ GRIDLINES E & 4
1 1/2" = 1'-0"

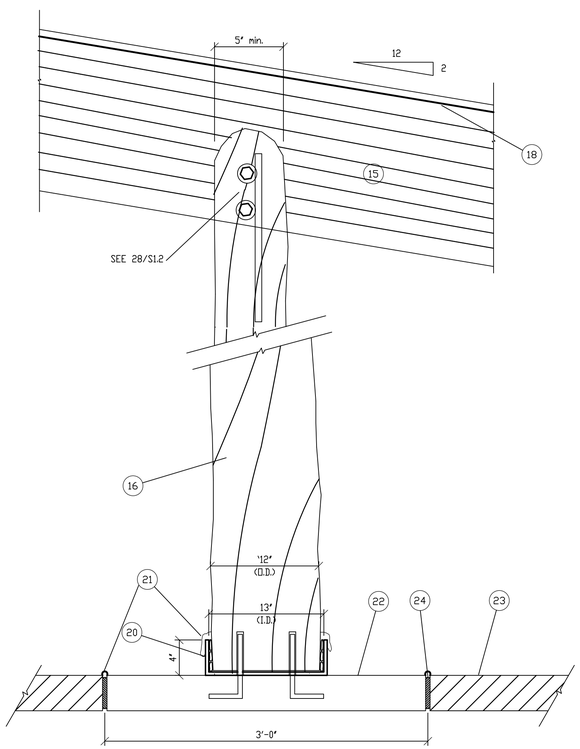

3 LOG COLUMN
1 1/2" = 1'-0"

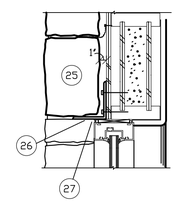

4 WINDOW HEAD @ WEST WALL
1 1/2" = 1'-0"

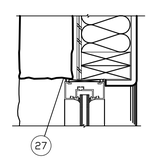

5 WINDOW JAMB @ WEST WALL
3"=1'-0"

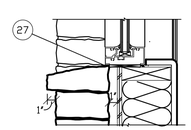

6 WINDOW SILL @ WEST WALL
3"=1'-0"

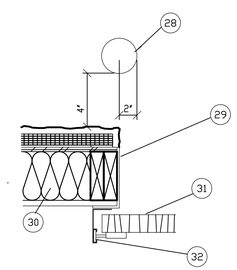

7 DOOR 109A JAMB
1 1/2" = 1'-0"

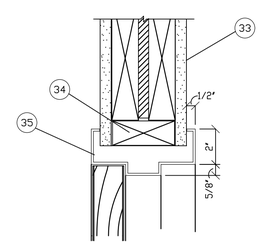

8 INTERIOR DOOR HEAD/JAMB
3" = 1'-0"

KEYNOTES

1. GALVANIZED GUTTER & DOWNSPOUT.
2. FASCIA BOARD. GALVANIZED SHEET METAL WRAPPED AROUND (2) 3/4" PLYWOOD, 18" HIGH X 10'-0" LONG.
3. 1 1/2" EIFS ON 1/2" EXTERIOR GYPSUM BOARD ON 2X6'S WITH R-19 BATT INSULATION OR BLOWN CELLULOSE.
4. GALVANIZED SHEET METAL FLASHING, 8" HIGH X 3/4" WIDE WITH DRIP EDGE.
5. LAG SCREW THROUGH LOGS UNDERCUT 1/2" & INTO 2 X 10 LINTEL.
6. THROUGH BOLT W/ BACKPLATE THROUGH ROUGH-SAWN & (2) 2 X 10 LINTELS & INTO 2 X 6 WALL FRAMING AT 4'-0" O.C. 3
7. 1 X ROUGH-SAWN CEDAR.
8. 3" - 6" DIAMETER PEELED & UNPEELED LOGS, IRREGULARLY SPACED. 6" GAPS MAX.
9. LAG SCREW THROUGH LOGS & INTO 6 3/4" X 18" GLU-LAM.
10. NEOPRENE CLOSER STRIP IN CORRUGATIONS (CONTINUOUS).
11. STANDARD GALVANIZED DRIP EDGE (CONTINUOUS).
12. STANDARD GALVANIZED DRIP EDGE, 18" LONG, INSTALLED VERTICALLY EVERY 10'-0" O.C. BETWEEN FASCIA BOARDS. SILICONE SEAL.
13. ROUND-HEAD WOOD SCREWS, 3" AWAY FROM FASCIA BOARD JOINTS & EVENLY SPACED 12'-0" IN BETWEEN.
14. GALVANIZED METAL CAP W/ 1/2" DRIP, BOTH SIDES.
15. 6 3/4" X 18" GLU-LAM BEAM.
16. 12"1 PEELED LOG (5" MIN. I AT TOP).
17. CEILING/BEAM DRYWALL REVEAL. MM SYSTEMS DTM(V) 58-34, BLACK. REVEAL OCCURS PARALLEL TO ALL EXPOSED GLU-LAM BEAMS @ DRYWALL CEILINGS.
18. 5/8" GYPBD. CEILING ON TJI'S.
19. SEE STRUCTURAL DRAWINGS FOR TYP. GLU-LAM TO POST CONNECTION.
20. 13" INSIDE DIAMETER X 4" HIGH X 1/8" THICK STEEL SAUCER W/ (2) 1/2"1 HOLES FOR ANCHOR BOLTS. PACK AROUND LOG COLUMN W/ FOAM BACKER RODS. DEPRESS 1/4".
21. LEAD DRIPPINGS.
22. 3'-0" I COLORED CONCRETE. SMOOTH FINISH. CLEAR SEALER.
23. GROUND-FACE EXPOSED AGGREGATE SLAB W/ SCORED JOINTS. CLEAR SEALER.
24. 1/2" EXPANSION MATERIAL. HOLD DOWN 1/8".
25. 4" - 6" LOCAL SANDSTONE VENEER.
26. L 4"X3 1/2"X5/16" LLV STEEL LINTEL W/ MIN. 6" BEARING EACH SIDE OF OPENING.
27. 1/4" SHIM & CAULK.
28. 4" DIA. CONCRETE FILLED BOLLARD, 42" HIGH. PAINT.
29. L 4 3/4" X 3" X 1/8" W/ (4) LAG SCREWS @ 24" O.C.
30. R-19 FIBERGLASS BATTS OR BLOWN CELLULOSE.
31. INSULATED METAL OVERHEAD DOOR - PROVIDE WEATHER STRIP AT ALL EDGES.
32. DOOR TRACK.
33. 5/8" GYPSUM BOARD. PAINT.
34. 2 X 4 FRAMING.
35. DW TYPE H.M. FRAME. PAINT.

NOTES

REVISIONS:
3 6/1/00 AS-BUILTS

patrik davis associates, a.i.a.
architecture planning
245 so. cascade
montrose, co 81401
phone (970) 249-5404
fax (970) 249-2768

CanyonLands Field
Moab, Utah
BID PACKAGE #2 - DETAILS

DRAWN	
CHECKED	PD
DATE	10/26/98
DWG. #	A-DT1.VWF
job no.	9713
sheet	A-10
# of sheets	

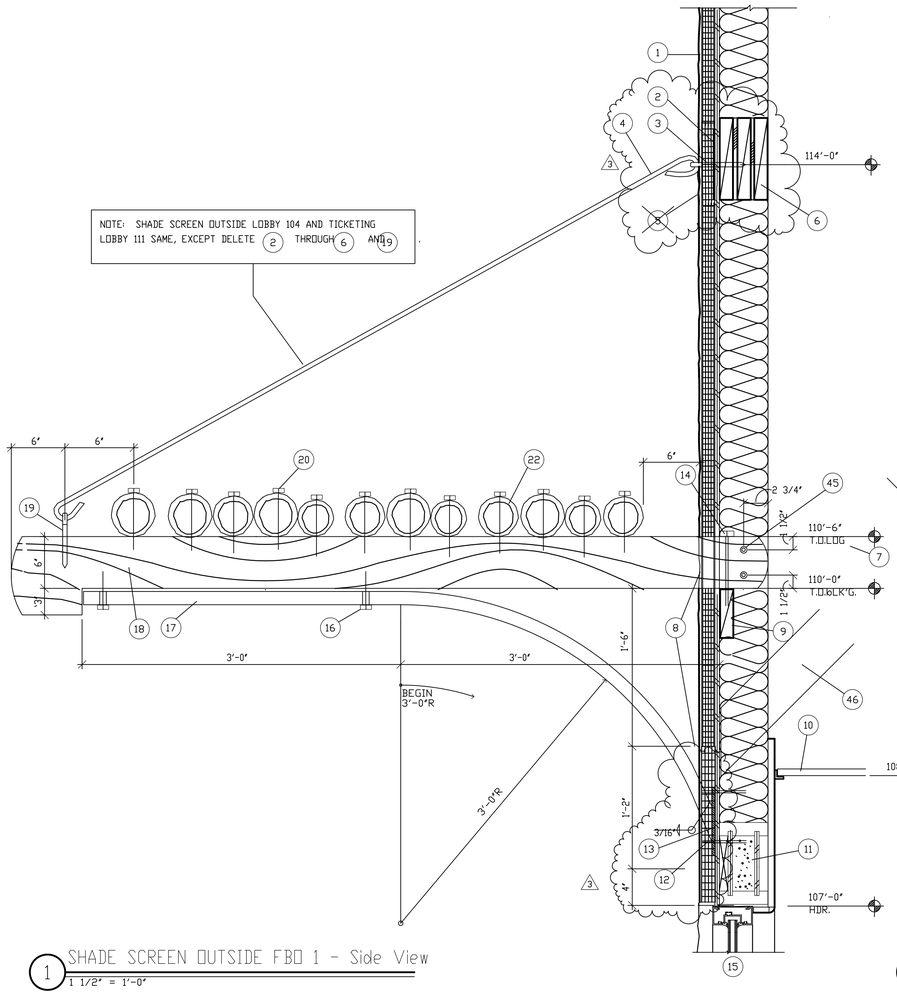

1 SHADE SCREEN OUTSIDE FBO 1 - Side View
1 1/2" = 1'-0"

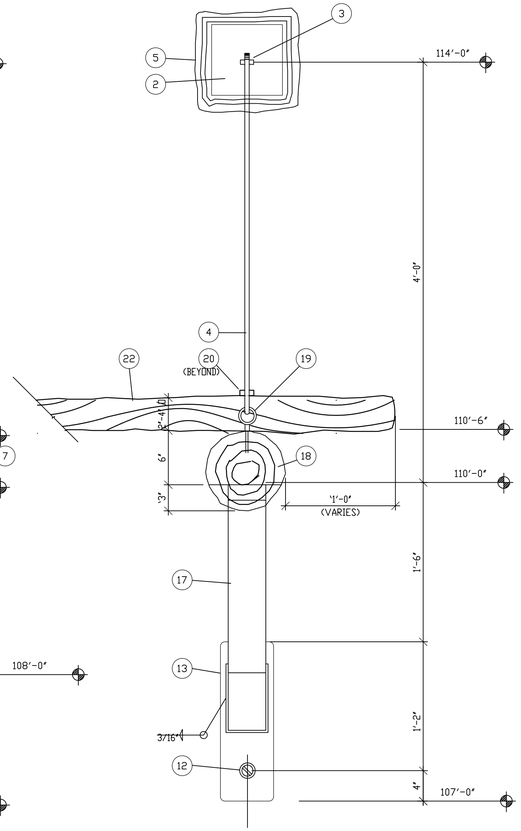

2 SHADE SCREEN OUTSIDE FBO 1 - Front View
1 1/2" = 1'-0"

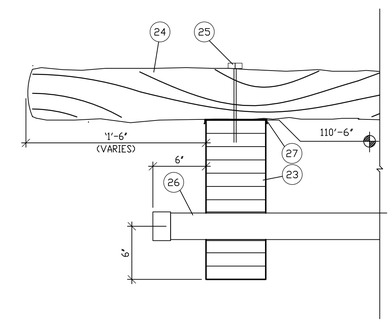

3 ENTRY CANOPY
1 1/2" = 1'-0"

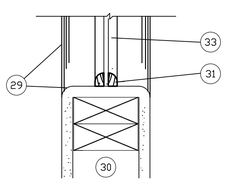

4 INTERIOR WINDOW SILL & JAMB (HEAD SIM.)
3" = 1'-0" (F AND G AT RETAIL 103)

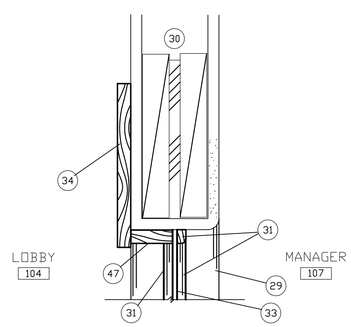

5 G WINDOW HEAD AT LOBBY 104
3" = 1'-0"

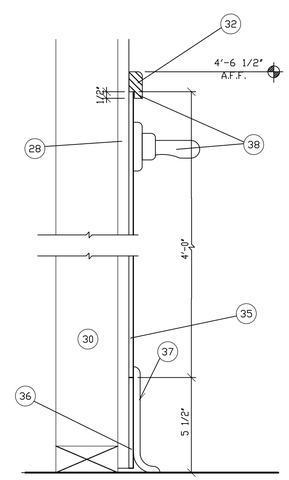

6 WAINSCOT AT RESTROOM 122 AND 123
3" = 1'-0"

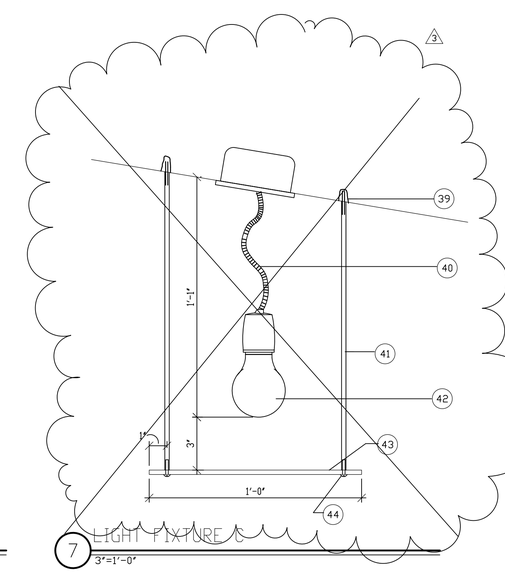

7 LIGHT FIXTURE C
3"=1'-0"

KEYNOTES

1. 1 1/2" EPS FOAM BOARD. EIFS STUCCO ON 1/2" EXTERIOR GYPBD. ON 2 X 6'S W/ R-19 BATTS OR BLOWN CELLULOSE.
2. 8" X 8" X 1/8" STEEL PLATE W/ 1/2"I HOLE IN CENTER (1 OF 5).
3. EYE BOLT THROUGH HOLE IN STEEL PLATE & INTO BLOCKING (1 OF 5).
4. #3 REBAR CRIMPLED AROUND EYE BOLTS.
5. ROLL EIFS AROUND STEEL PLATE (" 1 1/2" RADIUS).
6. (3) 2 X 8'S W/ (2) 1/2" PLYWD. FLITCH PLATES (1 OF 5, '2'-0" LONG). DO NOT INTERRUPT VERTICAL STUDS.
7. SETPOINT:
   110'-6" = TOP OF LOG BRACKET
   = TOP OF ADJACENT GLU-LAM BEAMS @ PATIO & ENTRY CANOPY.
8. EIFS ALL AROUND.
9. 2X6 LET-IN BLOCKING (1 OF 16, '2'-0" LONG).
10. ACT CEILING.
11. 9 1/4" FOAM HEADER PACK W/ BLOCKING ON OUTSIDE. EXTEND WINDOW HEADERS CONT. BTWN. WINDOWS TO RECEIVE SUPERIOR WOOD SYSTEMS, INC. CANOPY BRACKET BASE.
12. BRACKET TO BE ANCHORED BY 1/2" DIA. THRU-BOLTS AND BACKPLATES. (3)
13. 6" X 18" X 2" X 1/8" THICK BENT STEEL BRACKET BASE W/ 1/2"I HOLE AS SHOWN.
14. LAG SCREW THROUGH LOG & INTO BLOCKING.
15. WINDOW BEYOND.
16. 1/2"I LAG SCREW THROUGH HOLES IN TUBE STEEL & INTO LOG.
17. 4" X 2" BENT TUBE STEEL W/ (2) 1/2"I HOLES AS SHOWN (1 OF 16).
18. '9" I PEELED LOG (1 OF 16). UNDERCUT '3", 6" BACK FROM FRONT END, TO ACCEPT 4"W TUBE STEEL BRACKET. UNDERCUT EACH LOG @ BRACKETS TO TOP OUT @ 110'-6". SEE 7 .
19. EYE BOLT INTO 9"I LOG BRACKET (1 OF 5).
20. LAG SCREW THROUGH LOGS & INTO 9"I LOG BRACKET.
21.
22. 1" - 6"I PEELED & UNPEELED LOGS.
23. 6 3/4" X 18" GLU-LAM BEAM.
24. 6"I PEELED & UNPEELED LOGS.
25. LAG SCREW THROUGH LOG & INTO BEAM.
26. 3"I COPPER PIPE W/ COPPER END CAPS (1 OF 3).
27. GALVANIZED CAP W/ 1/2" DRIP EDGE, BOTH SIDES.
28. 5/8" GYPBD.
29. 5/8" RADIUS DRYWALL CORNER.
30. 2X4 FRAMING.
31. 1/2" X 3/4" QUARTER ROUND ALL AROUND.
32. 3/8" X 1 3/8" WOOD STOP. BACK CUT 1/16" FOR FRP. STAIN AND SEAL.
33. 1/4" CLEAR GLASS.
34. 1 X 10 R.S. CEDAR (AT (2) G WINDOWS). FACE NAIL OVER GYPSUM BOARD. ROUGH CUT ENDS OF 1 X 10 EXTEND 3'-6" PAST WINDOWS JAMBS.
35. FRP PANEL 4'-0" HIGH.
36. 5 1/2" FRP STRIP.
37. 6" RUBBER COVE BASE COVERS FRP JOINT.
38. INSTALL 36 TO ASSURE THAT WOOD TRIM RUNS CONTINUOUS ABOVE URINAL FLUSH VALVES AND ELECTRIC SWITCH PLATES.
39. (4) MACHINE BOLTS & ANCHOR SHIELDS IN GYPBD. CEILING.
40. FLEX CONDUIT & SOCKET OUT OF CEILING J-BOX.
41. 1/4" DIAMETER LIGHTWEIGHT ALUMINUM RODS (4 PER FIXTURE; (2) AT '16" AND (2) AT '14 1/2") THREADED AT BOTH ENDS FOR MACHINE BOLTS.
42. LAMP AS SPECIFIED ON LIGHTING DRAWINGS.
43. ONYX TILE, 3/8" THICK. 1/4" I HOLE @ EACH CORNER, INSET 1" FROM EACH SIDE.
44. 1/4" I MACHINE BOLT @ CORNERS. BOLT TO 1/4" DIAMETER LIGHT WEIGHT ALUMINUM RODS.
45. PROVIDE (2) 2 X 6 STUDS EACH SIDE OF LOG. BOLT THRU LOG AND STUDS USING (2) - 5/8" DIAMETER BOLTS.
46. PROVIDE 2 X 6 BRACE (2 PER LOG SUPPORT) AT EACH PAIR OF 2 X 6 STUDS. ATTACH WITH (6) 12D NAILS.
47. 1X ROUGH-SAWN CEDAR (AT (2) G WINDOWS). FACE NAIL OVER GYPBD.

NOTES

REVISIONS:
3 6/1/00 AS-BUILTS

patrik davis associates, a.i.a.
architecture planning
245 so. cascade
montrose, co 81401
phone (970) 249-5404
fax (970) 249-2768

Canyonlands Field
Moab, Utah
BID PACKAGE #2 - DETAILS

DRAWN	
CHECKED	PD
DATE	10/26/98
DWG. #	A-DT2.VWF
job no.	9713
sheet	A-11
# of sheets	

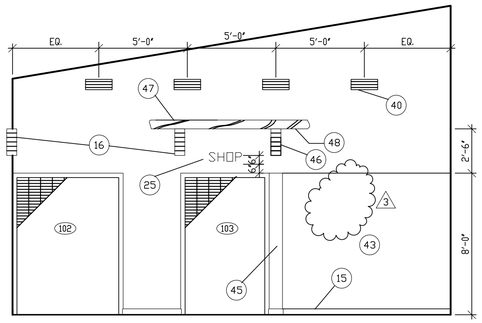

1 LOBBY 104 EAST
1/4" = 1'-0"

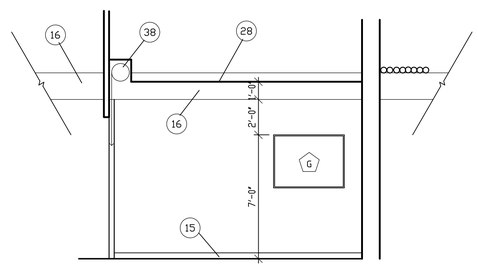

2 RETAIL 103 NORTH
1/4" = 1'-0"

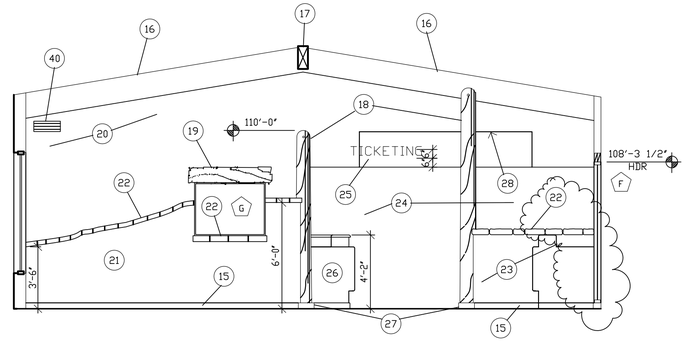

3 LOBBY 104 WEST (AT GRIDLINE C)
1/4" = 1'-0"

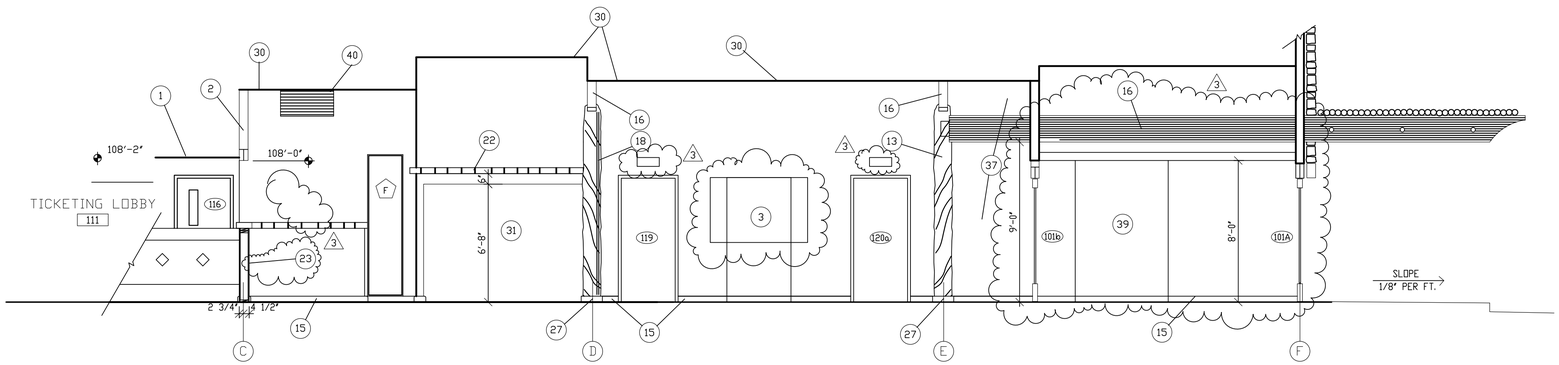

4 LOBBY 104 NORTH
1/4" = 1'-0"

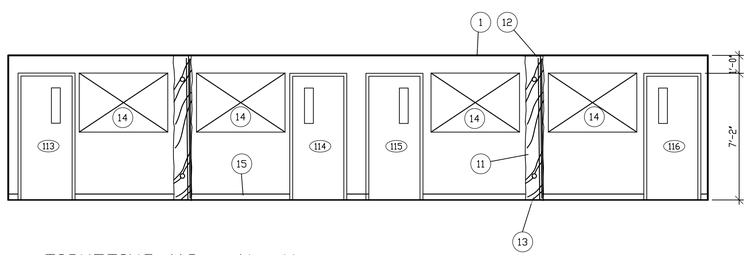

5 TICKETING 112 - North
1/4" = 1'-0"

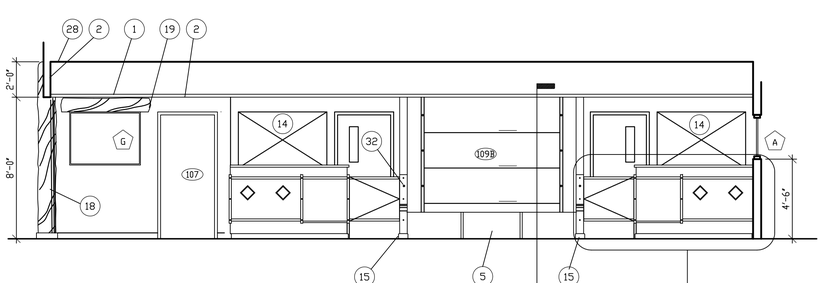

6 TICKETING 111 - SOUTH
1/4" = 1'-0"

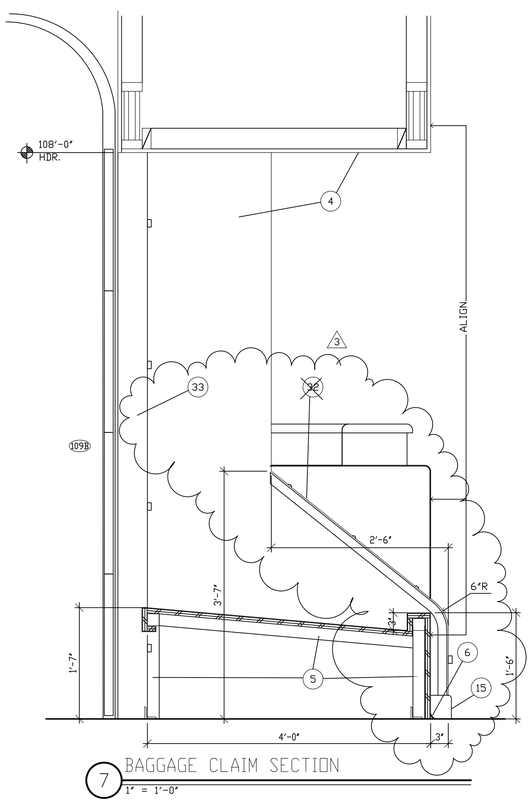

7 BAGGAGE CLAIM SECTION
1" = 1'-0"

KEYNOTES

1. ACT CEILNG 8'-2" AFF.
2. GYPBD. BULKHEAD @ 8'-0" AFF.
3. (E) BROCHURE RACK. △3
4. 5/8" GYPBD. ON 2X4 FRAMING. PAINT.
5. 2" TUBE STEEL FRAME W/ 3/4" PLYWD. WRAPPED W/ GALVANIZED SHEET METAL. HEMMED SEAMS @ 1/3 POINTS OF BAG SLIDE.
6. CAULK. CLEAR SILICONE.
11. 1 X 4 WOOD TRIM. △3
12. CUT HALF-LOG SNUG TO CONT. ACT CEILING.
13. SET HALF-LOG ON CARPET.
14. AIRLINE FLIGHT SCHEDULE & ADVERTISING BOARDS (N.I.C.).
15. 1X4 D PINE BASE W/ 1/2"R. ROLLED TOP EDGE.
16. 6 3/4" X 18" GLU-LAM BEAM.
17. 6 3/4" X 15" GLU-LAM BEAM.
18. 12"I PEELED LOG COLUMNS. SEE 3/A-10.
19. 1X10 ROUGH-SAWN HEADER TRIM. EXTEND 3" - 6" PAST WINDOW W/ ROUGH-CUT & HAMMERED ENDS. NAIL ONTO GYPBD. WALL. SEE 5/A-11.
20. 5/8" GYPBD. ON FULL-HT. 2X4 FRAMING ALONG GRIDLINE C.
21. 2X4 FRAMING SCABBED ONTO LOBBY 104 SIDE OF (20). VARY PLATE HT. FROM 3'-6" TO 6'-0" FOR FLAGSTONE LEDGE. 5/8" GYPBD, NO TEXTURE. WALL COVERING BY OTHERS (N.I.C.).
22. 2 1/2" - 3" THICK SANDSTONE FLAGSTONE CAP "9" WIDE IN MORTAR BED OVER 20 LB. BLDG. PAPER NAILED TO TOP PLATE.
23. 2X8 HALF-WALL. 5/8" GYPBD., NO TEXTURE. WALL COVERING BY OTHERS (N.I.C.).
24. OPEN TO TICKETING LOBBY 111.
25. 6"H X 1/8" THICK ROUGH-CUT STEEL LETTERS. SET 1/2" AWAY FROM WALL ON SPACER RODS.
26. END OF TICKET COUNTER BEYOND.
27. 4"H STEEL COLUMN BASE. SEE 3/A-10.
28. ACT CEILNG 10'-0" AFF.
29. TICKETING 112 BEYOND
30. JUNCTURE OF GYPBD. WALL & SLOPING GYPBD. CEILING.
31. VENDING ALCOVE. VENDING MACHINES N.I.C. △3
32. ~~5" X 1/8" BENT STEEL PLATE W/ EASED EDGES. (4) LAG SCREWS. @ 1'-2" O.C.~~
33. HEAVY GAUGE GALVANIZED STEEL W/ (4) LAG SCREWS @ 24" O.C.
37. 5/8" GYPBD. ON 2X4 FRAMING CENTERED ON GLU-LAM BEAM, ABV. & BELOW.
38. COILING GRILLE (1 OF 2).
39. ALCOVE TO RESTROOMS.
40. AIR GRILLE. SEE MECH. DRAWINGS.
43. SEATING ALCOVE. 5/8" GYPBD. WALLS & CEILING.
45. 2X8 FIN WALL. 5/8" GYPBD.
46. 6 3/4" X 18" GLU-LAM BEAM EXTENDING 2'-0" OUT FROM WALL. RADIUS-CUT SIM. TO EXTERIOR GLU-LAMS.
47. (8) 6"I PEELED LOGS. EXTEND 12" - 18" PAST GLU-LAMS (VARIES). LAG SCREW INTO GLU-LAMS.
48. LAG SCREW LOG ENDS INTO CEILING OF SEATING ALCOVE.
49. ~~3 1/8" X 12" GLU-LAM BEAM. OPEN ABOVE & BELOW.~~

NOTES

REVISIONS:
△3 6/1/00 AS-BUILTS

patrik davis associates, a.i.a.
architecture planning
245 so. cascade
montrose, co 81401
phone (970) 249-5404
fax (970) 249-2768

CanyonLands Field
Moab, Utah
BID PACKDAGE #2 - INTERIOR ELEVATIONS

DRAWN	
CHECKED	PD
DATE	10/26/98
DWG. #	A-EL-I.VWF
job no.	9713
sheet	A-12
# of sheets	

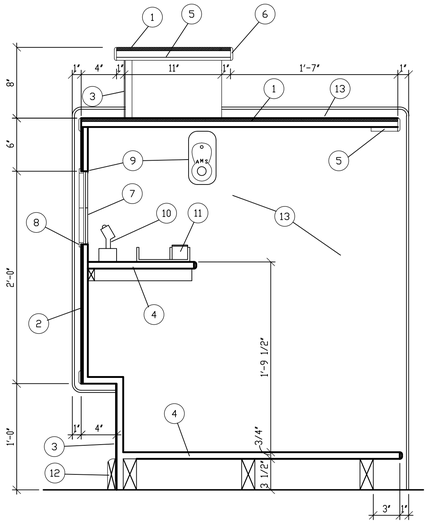

1 TICKET COUNTER SECTION
1 1/2" = 1'-0"

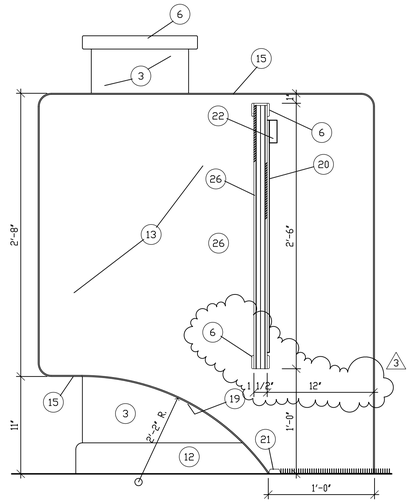

2 GATE SECTION
1 1/2" = 1'-0"

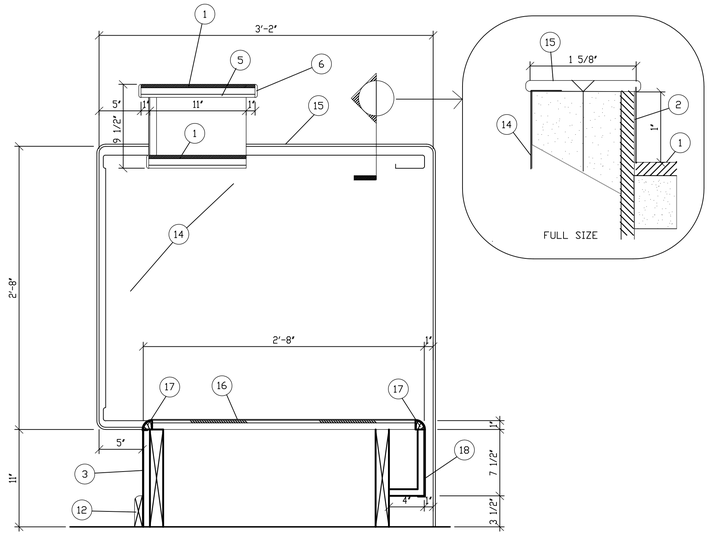

3 BAGWELL SECTION
1 1/2" = 1'-0"

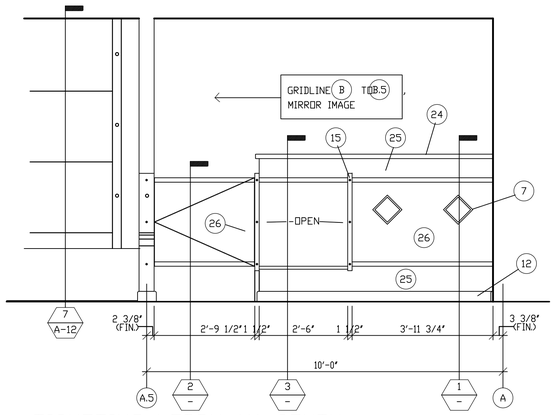

4 TICKETING LOBBY 111 SOUTH
1/2" = 1'-0"

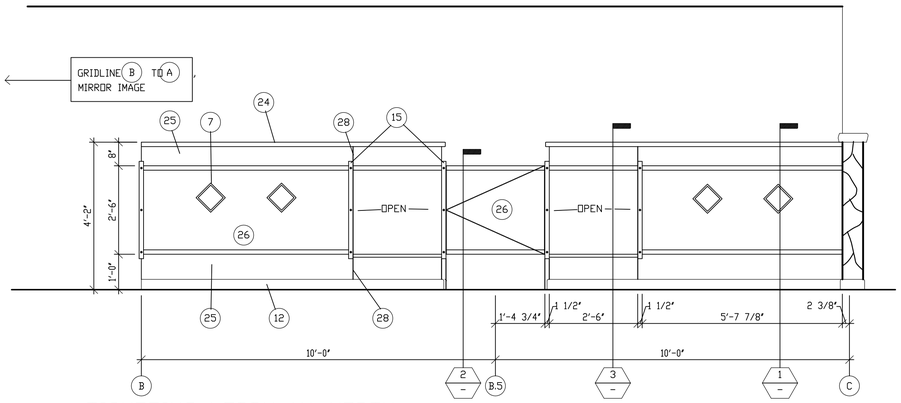

5 TICKETING LOBBY 111 NORTH
1/2" = 1'-0"

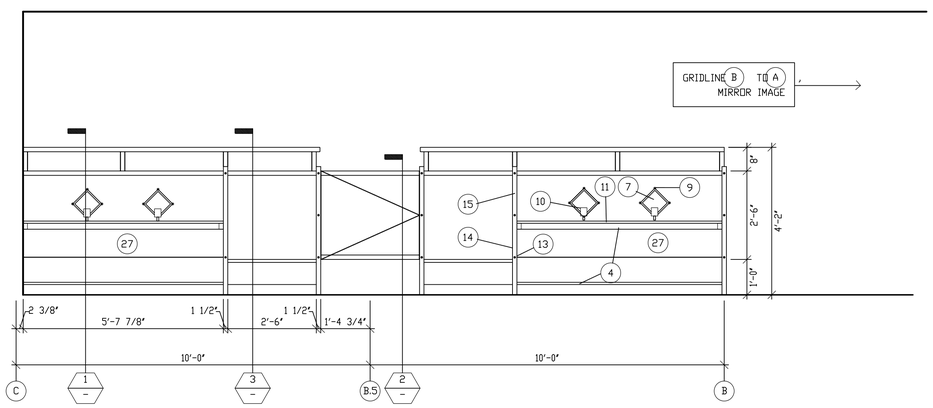

6 TICKETING LOBBY 112 NORTH
1/2" = 1'-0"

KEYNOTES

1. 1/4" MASONITE GLUED TO 3/4" PARTICLE BD. SPRAY LACQUER.
2. 1/4" MASONITE GLUED TO 1/2" PARTICLE BD. SPRAY LACQUER.
3. 3/4" PARTICLE BD. W/ P. LAM. #1 ON ONE SIDE.
4. 3/4" PARTICLE BD. SHELVING W/ SCREEN MOULD ON LEAD EDGE (UNFINISHED).
5. 1/2" PARTICLE BD. (UNFINISHED).
6. 1/4" X 1 1/2" MAPLE. EASE EDGES.
7. 6" X 6" X 3/8" ONYX TILE SET IN DIAMOND PATTERN.
8. 3/8" X 3/8" X 1/8" ALUMINUM ANGLE. MITER CUT.
9. AMS ALUMINUM PICTURE FRAME KEEPER (ONE @ EACH TILE CORNER, 1/8" MAX. ONTO TILE FACE).
10. LIGHT FIXTURE Z. SEE ELECTRICAL.
11. SURFACE RACEWAY. SEE ELCTRICAL.
12. 1X4 D PINE BASE W 1/2" R. TOP EDGE. STAIN & SEAL. (NOTE: INSTALLATION BY TRIM CARPENTERS. NOT PART OF CABINET BID.)
13. BACK OF BAGWELL SIDE PANEL BEYOND. SPRAY LACQUER MASONITE FACE.
14. BAGWELL SIDE PANEL. GALVANIZED SHEET METAL.
15. 1 5/8" X 1/8" STEEL BAR W/ EASED EDGES. ATTACH TO PARTICLE BD. W/ FLATHEAD WOOD SCREWS COUNTERSUNK FLUSH @ 12" O.C.
16. BAGWELL BOTTOM PANEL. GALVANIZED SHEET METAL ON 1/4" MASONITE GLUED TO 3/4" PARTICLE BD.
17. 1" SHAPED HARDWOOD W/ 1"R.
18. GALVANIZED SHEET METAL ON 3/4" PARTICLE BD.
19. 1 1/2" REVEAL.
20. PIANO HINGE.
21. RUBBER CARPET TRANSITION STRIP.
22. GATE LATCH. ROCKWOOD #602, DULL CHROME FINISH.
23. CLEAR SILICONE CAULK.
24. LACQUERED MASONITE COUNTERTOP W/ 1 1/2" X 1/4" MAPLE EDGE. SEE (6).
25. PLASTIC LAM. #1.
26. LACQUERED MASONITE.
27. CABINETES UNFINISHED ON AIRLINE SIDE. INSERTS BY TENANTS.
28. PLASTIC LAM. JOINT.

NOTES

REVISIONS:
3 6/1/00 AS-BUILTS

patrik davis associates, a.i.a.
architecture planning
245 so. cascade
montrose, co 81401
phone (970) 249-5404
fax (970) 249-2768

CanyonLands Field
Moab, Utah
BID PACKAGE #2 - INTERIOR ELEVATIONS & CASEWORK DETAILS

DRAWN	
CHECKED	PD
DATE	10/26/98
DWG. #	A-EL-1.VWF
job no.	9713
sheet	A-13
# of sheets	

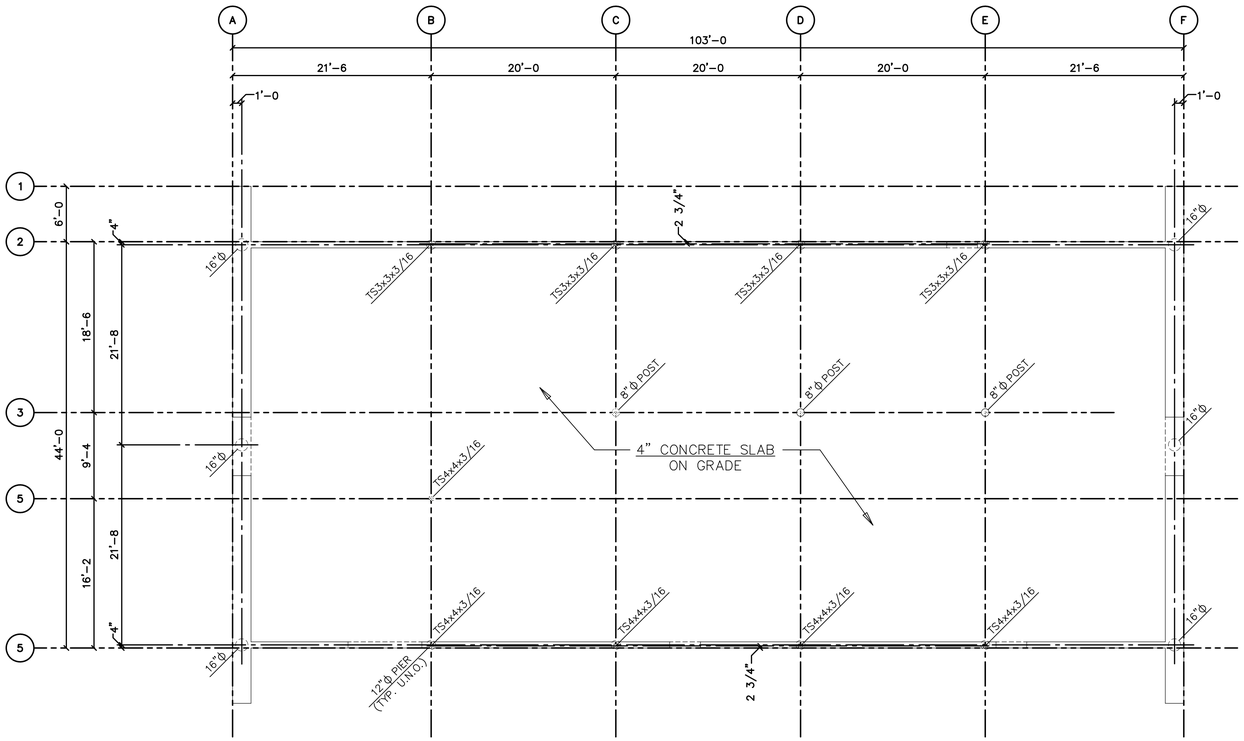

FOUNDATION PLAN

1/8"=1'-0

NORTH

1. T.O. SLAB EL. 100'-0. REINFORCE WITH 6x6 – W1.4xW1.4 W.W.F. PLACE IN MIDDLE OF SLAB.

L.J. LINDAUER, INC.
STRUCTURAL ENGINEERS
802 Rood Avenue
Grand Junction, CO 81501
PHONE 970/241-0900
FAX 970/243-2430

CANYONLANDS FIELD
TERMINAL
MOAB, UTAH
FOR: PATRIK DAVIS ASSOCIATES

REVISIONS

JOB NUMBER: 9886

9-11-98

S1.1

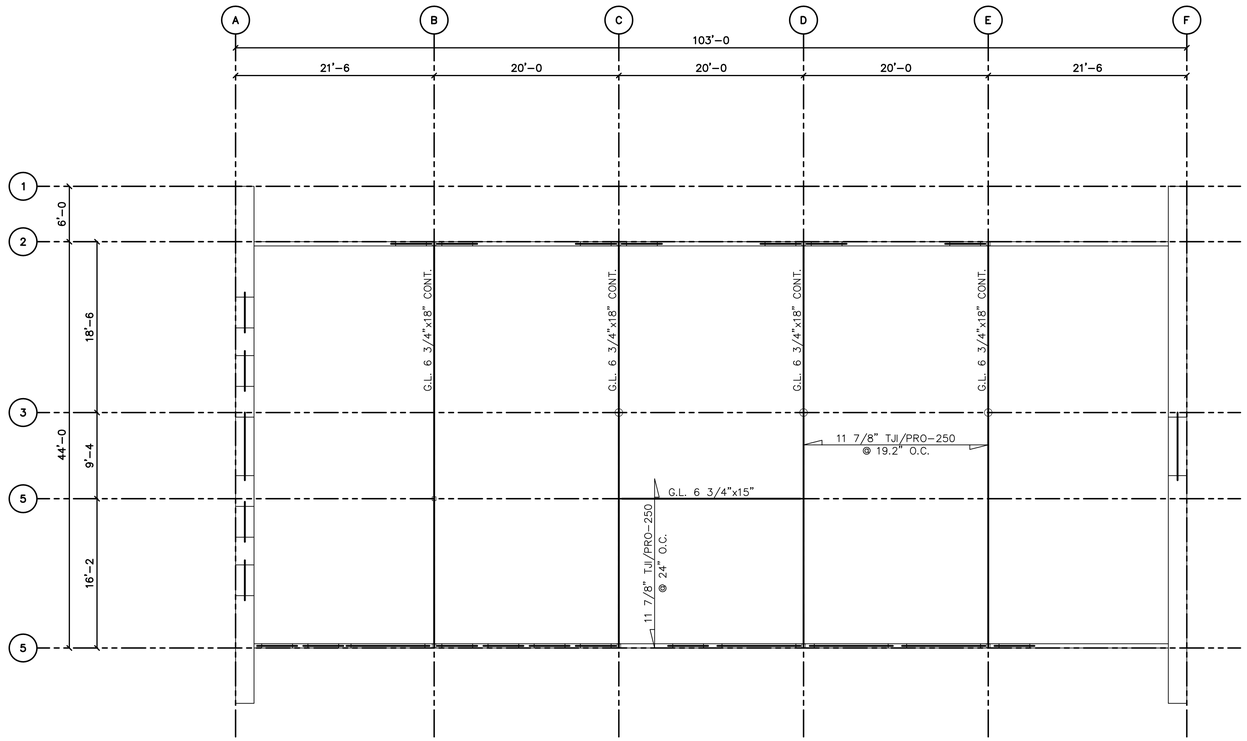

ROOF FRAMING PLAN

1/8"=1'-0

NORTH

1. ALL EXTERIOR WALL HEADERS ARE TO BE (3) 2x10 WITH (2) PLYWOOD FLITCH PLATES. BEAR ON (2) 2x6 STUDS EACH END.

L.J. LINDAUER, INC.
STRUCTURAL ENGINEERS
802 Rood Avenue
Grand Junction, CO 81501
PHONE 970/241-0900
FAX 970/243-2430

CANYONLANDS FIELD
TERMINAL
MOAB, UTAH
FOR: PATRIK DAVIS ASSOCIATES

REVISIONS

JOB NUMBER: 9886

9-11-98

S1.2

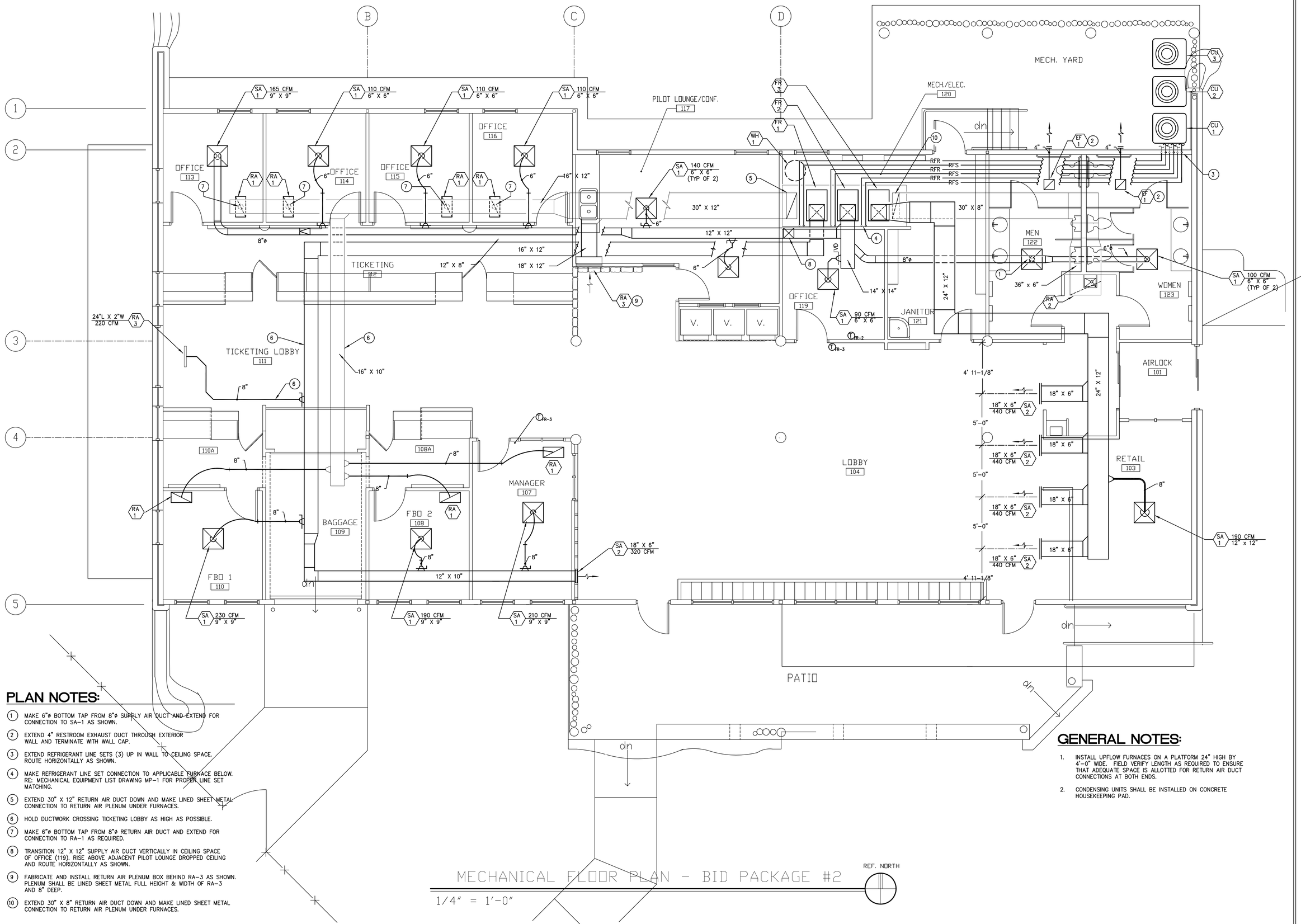

MECHANICAL FLOOR PLAN - BID PACKAGE #2

1/4" = 1'-0"

PLAN NOTES:

1. MAKE 6"ø BOTTOM TAP FROM 8"ø SUPPLY AIR DUCT AND EXTEND FOR CONNECTION TO SA-1 AS SHOWN.
2. EXTEND 4" RESTROOM EXHAUST DUCT THROUGH EXTERIOR WALL AND TERMINATE WITH WALL CAP.
3. EXTEND REFRIGERANT LINE SETS (3) UP IN WALL TO CEILING SPACE. ROUTE HORIZONTALLY AS SHOWN.
4. MAKE REFRIGERANT LINE SET CONNECTION TO APPLICABLE FURNACE BELOW. RE: MECHANICAL EQUIPMENT LIST DRAWING MP-1 FOR PROPER LINE SET MATCHING.
5. EXTEND 30" X 12" RETURN AIR DUCT DOWN AND MAKE LINED SHEET METAL CONNECTION TO RETURN AIR PLENUM UNDER FURNACES.
6. HOLD DUCTWORK CROSSING TICKETING LOBBY AS HIGH AS POSSIBLE.
7. MAKE 6"ø BOTTOM TAP FROM 8"ø RETURN AIR DUCT AND EXTEND FOR CONNECTION TO RA-1 AS REQUIRED.
8. TRANSITION 12" X 12" SUPPLY AIR DUCT VERTICALLY IN CEILING SPACE OF OFFICE (119). RISE ABOVE ADJACENT PILOT LOUNGE DROPPED CEILING AND ROUTE HORIZONTALLY AS SHOWN.
9. FABRICATE AND INSTALL RETURN AIR PLENUM BOX BEHIND RA-3 AS SHOWN. PLENUM SHALL BE LINED SHEET METAL FULL HEIGHT & WIDTH OF RA-3 AND 8" DEEP.
10. EXTEND 30" X 8" RETURN AIR DUCT DOWN AND MAKE LINED SHEET METAL CONNECTION TO RETURN AIR PLENUM UNDER FURNACES.

GENERAL NOTES:

1. INSTALL UPFLOW FURNACES ON A PLATFORM 24" HIGH BY 4'-0" WIDE. FIELD VERIFY LENGTH AS REQUIRED TO ENSURE THAT ADEQUATE SPACE IS ALLOTTED FOR RETURN AIR DUCT CONNECTIONS AT BOTH ENDS.
2. CONDENSING UNITS SHALL BE INSTALLED ON CONCRETE HOUSEKEEPING PAD.

BURGGRAAF ASSOCIATES INC.
CONSULTING ENGINEERS
715 HORIZON DR., SUITE 220
GRAND JUNCTION, COLORADO 81506
(970) 245-3881 FAX:(970) 245-5826

CANYONLANDS FIELD
MOAB, UTAH

REV.	DATE

DRAWING TITLE:
HVAC FLOOR PLAN

DATE: 11-6-98
SCALE: 1/4"=1'-0"
PROJ. NO. 805A
DRAWN BY: MB
CHKD BY: MB

DRAWING NO.
M-1
OF 1

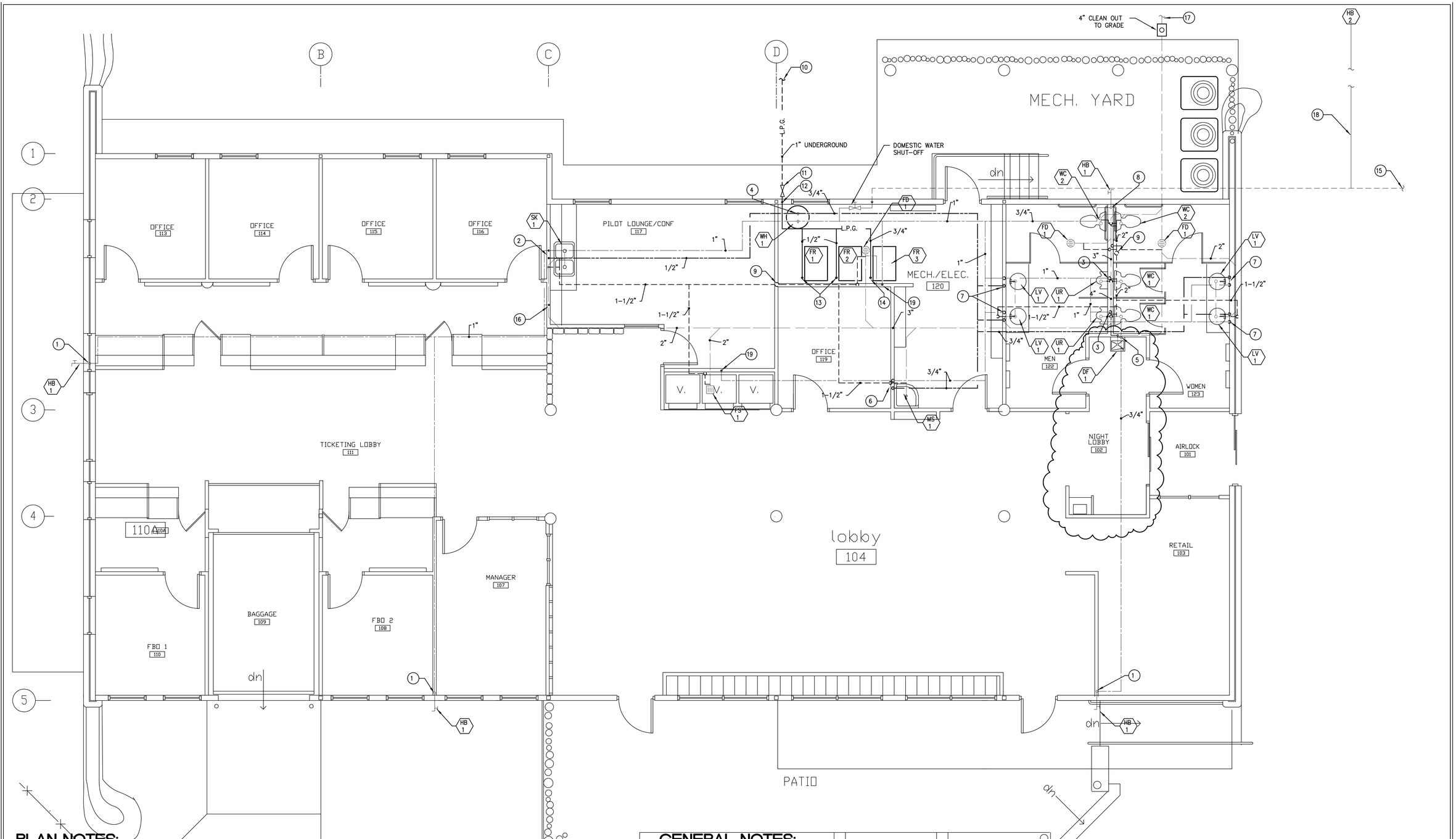

PLAN NOTES:

1. EXTEND 3/4" COLD WATER DOWN IN WALL FOR CONNECTION TO HOSEBIBB BELOW.
2. EXTEND 1/2" HW/CW DOWN IN WALL TO SERVE TWO COMPARTMENT SINK BELOW.
3. EXTEND 3/4" COLD WATER DOWN IN WALL TO SERVE BACK TO BACK PLUMBING FIXTURES AS SHOWN.
4. 3/4" HOT WATER UP FROM WH-1. ROUTE HORIZONTALLY IN CEILING.
5. EXTEND 1/2" COLD WATER DOWN IN WALL TO SERVE DRINKING FOUNTAIN BELOW.
6. EXTEND 1/2" HW/CW DOWN IN WALL TO SERVE MOP SINK BELOW.
7. EXTEND 1/2" HW/CW DOWN IN WALL TO SERVE LAVATORY BELOW.
8. EXTEND 3/4" COLD WATER DOWN IN WALL TO SERVE BACK TO BACK WATER CLOSETS BELOW & EXTERIOR HOSEBIBB AS SHOWN.
9. INCREASE COMBINED VENT TO 4" IN CEILING SPACE AND EXTEND UP THROUGH ROOF.
10. EXTEND 1" LP GAS UNDERGROUND TO 500 GALLON LP GAS STORAGE TANK (BY LP GAS SUPPLIER) INSTALL ON CONCRETE PAD PER SUPPLIER INSTRUCTIONS.
11. INSTALL GAS REGULATOR AT EXTERIOR OF BUILDING. REGULATOR SHALL BE SIZED FOR 275 MBH.
12. EXTEND 1" LP GAS UP IN WALL TO CEILING SPACE. ROUTE HORIZONTALLY AS SHOWN.
13. EXTEND 1/2" LP GAS DOWN TO SERVE FURNACE BELOW.
14. EXTEND 3/4" LP GAS DOWN TO SERVE FURNACE BELOW.
15. 1-1/2" DOMESTIC COLD WATER FROM SITE MAIN. RE: ARCHITECTURAL/CIVIL FOR EXACT POINT OF CONNECTION.
16. EXTEND 1/4" COLD WATER DOWN IN WALL FOR REFRIGERATOR/ICEMAKER. TERMINATE IN VALVED REFRIGERATOR WALL BOX.
17. EXTEND 4" WASTE TO SITE SEWER. RE: ARCHITECTURAL/CIVIL FOR EXACT TERMINATION LOCATION.
18. EXTEND 3/4" CW UNDERGROUND TO RENTAL CAR PARKING AREA. INSTALL HB-2 PER MANUFACTURERS INSTRUCTIONS. FIELD VERIFY INSTALLATION LOCATION WITH ARCHITECT/OWNER PRIOR TO ROUTING.
19. EXTEND 1/2" COLD WATER FROM TRAP PRIMER DOWN IN WALL.

GENERAL NOTES:

1. ~~UNLESS~~ OTHERWISE NOTED ~~ALL~~ DOMESTIC WATER SHOWN SHALL BE ROUTED IN THE CEILING SPACE ~~AND DOWN~~ IN WALLS TO SERVE PLUMBING FIXTURES.
2. VENT LINES ARE SHOWN OUTSIDE WALLS FOR THE PURPOSE OF CLARITY ONLY.
3. AVOID ROUTING PIPING IN EXTERIOR WALL WHEN POSSIBLE. ANY PIPING ROUTED IN THE EXTERIOR WALL SHALL BE ROUTED ON THE WARM SIDE OF INSULATION.
4. RE: PLUMBING FIXTURE CONNECTION SCHEDULE DRAWING MP-1 FOR DOMESTIC WASTE AND VENT SIZES NOT SHOWN ON PLAN.

BURGGRAAF ASSOCIATES INC.
CONSULTING ENGINEERS
715 HORIZON DR. SUITE 28
GRAND JUNCTION, COLORADO 81506
(970) 245-3801 FAX (970) 245-8026

CANYONLANDS FIELD
MOAB, UTAH

REV.	DATE
#1	12/01/98

DRAWING TITLE:
NEW TERMINAL
PLUMBING FLOOR PLAN

DATE: 11-6-98
SCALE: 1/4"=1'-0"
PROJ. NO. 8054
DRAWN BY: BAI
CHKD BY: MD

DRAWING NO.
P-1
OF 1

GENERAL NOTES:

1. UNLESS OTHERWISE NOTED, ALL DOMESTIC WATER PIPING SHALL BE 3/4" TYPE M COPPER.
2. RE: FIXTURE CONNECTION SCHEDULE FOR DOMESTIC WATER, WASTE AND VENT PIPING CONNECTION SIZES.
3. UNLESS OTHERWISE NOTED ALL COMPRESSED AIR PIPING SHALL BE 1".
4. ALL POSSIBLE SOURCES OF IGNITION SHALL BE LOCATED A MINIMUM OF 18" AFF. THIS INCLUDES, BUT IS NOT LIMITED TO, AIR COMPRESSORS, ELECTRIC CABINET UNIT HEATERS, UNIT HEATERS AND EXHAUST FANS.

PLAN NOTES:

1. ROUTE 36" X 30" SUPPLY AIR DUCT UP ALONG EXTERIOR WALL TO APPROXIMATELY 21 FEET A.F.F. EXTEND THROUGH WALL AND ROUTE HORIZONTALLY AS SHOWN (SUSPEND BETWEEN STRUCTURE BEAMS). ENSURE THAT BOTTOM OF DUCT IS MINIMUM 20 FT ABOVE FLOOR.
2. ROUTE 34" X 24" SUPPLY AIR DUCT UP ALONG EXTERIOR WALL. EXTEND THROUGH WALL AND ROUTE HORIZONTALLY ABOVE BOTTOM CHORD OF ROOF STRUCTURE.
3. INSTALL EVAPORATIVE COOLERS ON 6" HIGH HOUSEKEEPING PAD THAT IS APPROXIMATELY 12" LARGER THAN UNIT IN ALL DIRECTIONS. EXTEND PAD TO BUILDING.
4. 1" LP GAS SERVICE FROM LP GAS STORAGE TANK.
5. INSTALL LP GAS REGULATOR AT EXTERIOR OF BUILDING. REGULATOR SHALL BE SIZED FOR 500 MBH.
6. EXTEND 1-1/4" LP GAS UP ON EXTERIOR OF BUILDING TO APPROXIMATELY 22' A.F.F. ROUTE HORIZONTALLY AT CEILING LEVEL AS SHOWN.
7. MAKE 1" LP GAS CONNECTION TO UNIT HEATER.
8. INSTALL AIR COMPRESSOR ON STRUCTURAL PLATFORM AT 9'-2" A.F.F.
9. EXTEND 3/4" COMPRESSED AIR PIPING DOWN AND TERMINATE AT 30" A.F.F. WITH 1/2" FEMALE SLEEVE TYPE COUPLER BY SPEEDAIRE OR APPROVED EQUAL.
10. SUSPEND GAS FIRED UNIT HEATER FROM STRUCTURE WITH 1/2" ALL-THREAD RODS AT 15' A.F.F.
1. EXTEND 8" TYPE "B" VENT UP THROUGH ROOF AND TERMINATE WITH WEATHER CAP 2'-0" ABOVE ROOF STRUCTURE WITHIN 10'-0".
2. INSTALL UH-2 THERMOSTAT ON WALL AT 60" A.F.F. THERMOSTAT MOUNTED ON EXTERIOR WALL SHALL BE INSTALLED WITH 1" THICK STYROFOAM INSULATION BACKER BOARD.
3. EXTEND 1" WATER SERVICE INTO BUILDING FROM SITE WATER SERVICE LINE. MAINTAIN 10'-0" SEPARATION FROM BUILDING WASTE LINE.
4. EXTEND 1" CW UP IN EXTERIOR WALL TO 10'-0" A.F.F. ROUTE PIPING UP ON THE WARM SIDE OF THE EXTERIOR WALL INSULATION.
5. EXTEND 2" VENT FROM SO-1 DISCHARGE CONNECTION (TYPICAL FOR INLET) UP IN EXTERIOR WALL. CONNECT TO INLET VENT RISER AT 6" A.F.F. AND EXTEND 2" VENT UP THROUGH ROOF.
6. EXTEND 6" EXHAUST DUCT THROUGH EXTERIOR WALL AND TERMINATE WITH EXHAUST CAP.
7. EXTEND 4" WASTE TO SITE WASTE SYSTEM.
8. EXTEND 1/2" CW LINE TO EVAPORATIVE COOLER MAKE-UP WATER CONNECTION. INSTALL BALL VALVES AS REQUIRED TO SHUT OFF WATER TO THE COOLER AND DRAIN THE MAKE-UP WATER LINE.
9. RE: TYPICAL RESTROOM DETAIL AT 3/MP-2 FOR DETAILED PIPNG IN THIS AREA.
10. RE: TYPICAL RESTROOM DETAIL AT 4/MP-2 FOR DETAILED PIPNG IN THIS AREA.
21. 500 GALLON LP GAS STORAGE TANK. (BY LP GAS SUPPLIER. INSTALL CONCRETE HOUSEKEEPING PAD PER SUPPLIER INSTRUCTIONS.)
22. INSTALL 1/2" BALL VALVE DOWNSTREAM FROM EVAPORATIVE COOLER CW SHUT-OFF VALVE. VALVE SHALL BE OPEN TO ATMOSPHERE TO BREAK VACUUM IN EVAPORATIVE COOLER SERVICE LINE.

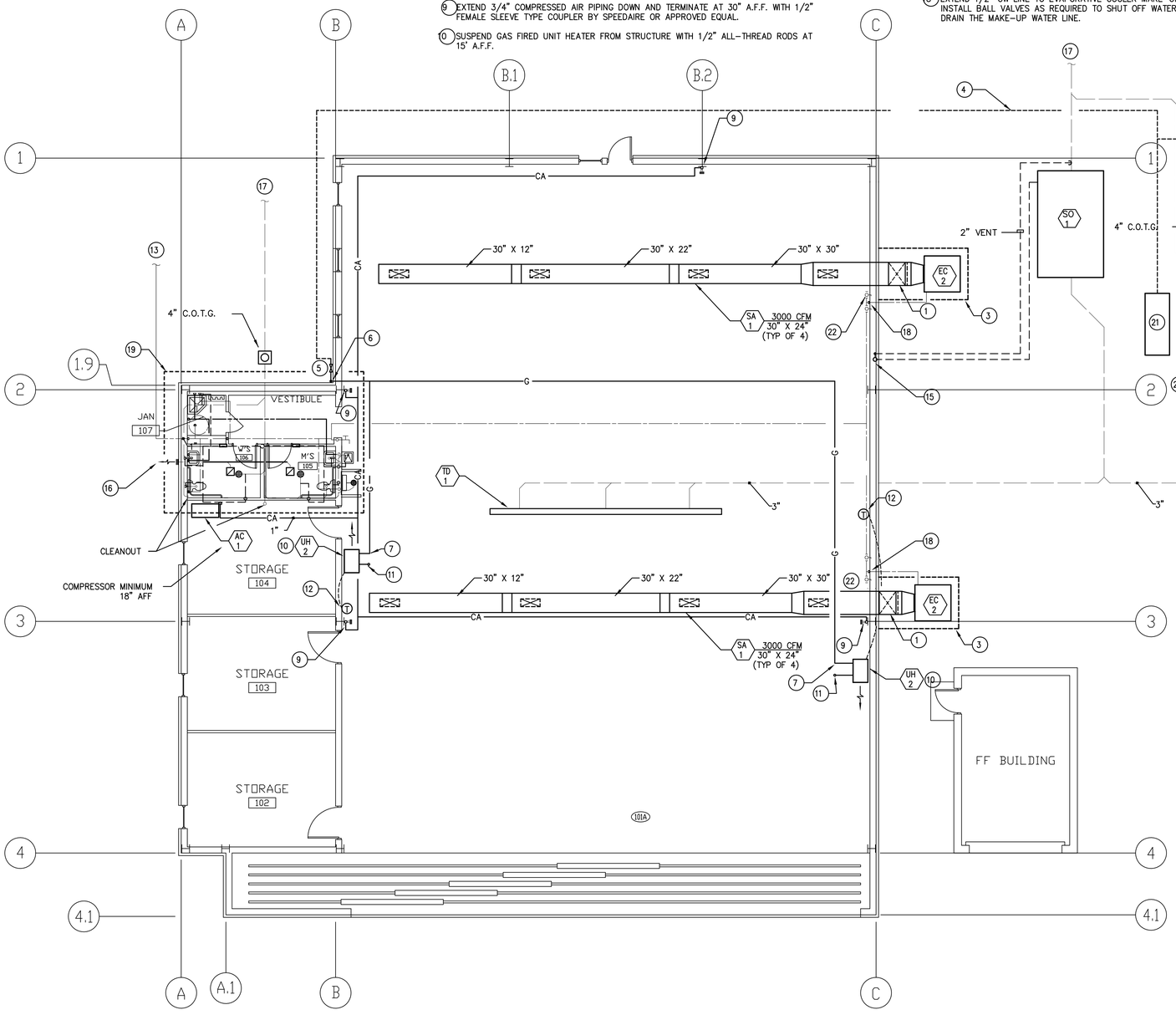

HANGAR "B" MECHANICAL FLOOR PLAN

1/8" = 1'-0"

REF. NORTH

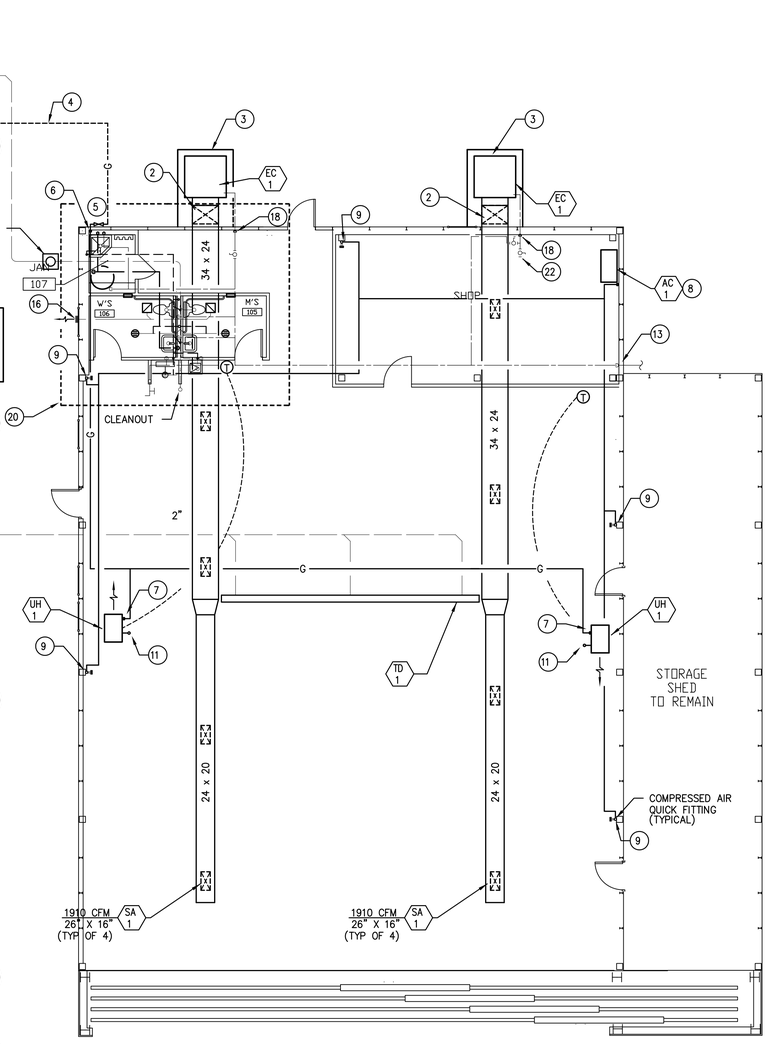

HANGAR "A" MECHANICAL FLOOR PLAN

1/8" = 1'-0"

REF. NORTH

BURGGRAAF ASSOCIATES INC.
CONSULTING ENGINEERS
715 HORIZON DR., SUITE 220
GRAND JUNCTION, COLORADO 81506
(970) 243-3001 FAX (970) 243-3026

CANYONLANDS FIELD
MOAB, UTAH

REV.	DATE

DRAWING TITLE:
HANGARS A + B
HVAC AND PLUMBING
FLOOR PLANS

DATE: 08-27-98
SCALE: 1/8"=1'-0"
PROJ. NO. 8054
DRAWN BY: BAI
CHKD BY: MB

DRAWING NO.
MP-1
OF 2

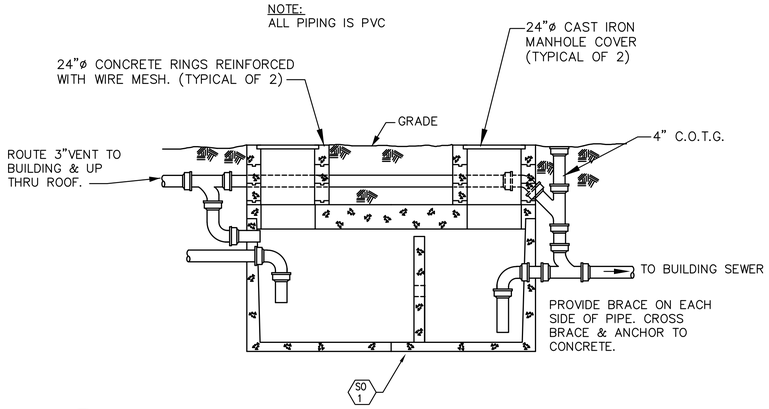

1 MP-2 EXTERIOR SAND/OIL INTERCEPTOR

N.T.S.

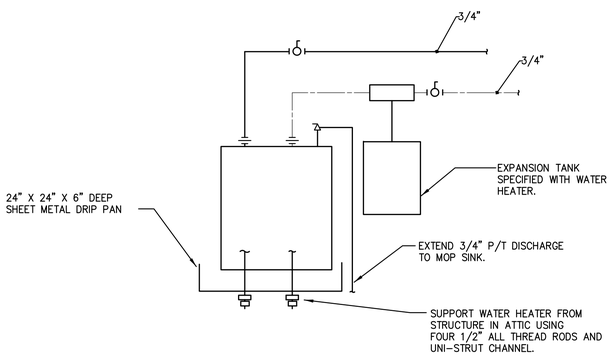

2 MP-2 WATER HEATER INSTALLATION DETAIL

N.T.S.

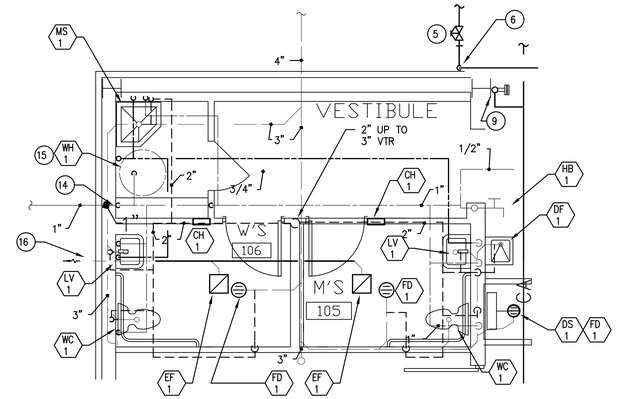

3 MP-2 WASTE AND VENT DETAIL HANGAR "B"

1/4" = 1'-0"

REFER TO DRAWING MP-1 FOR PLAN NOTES.

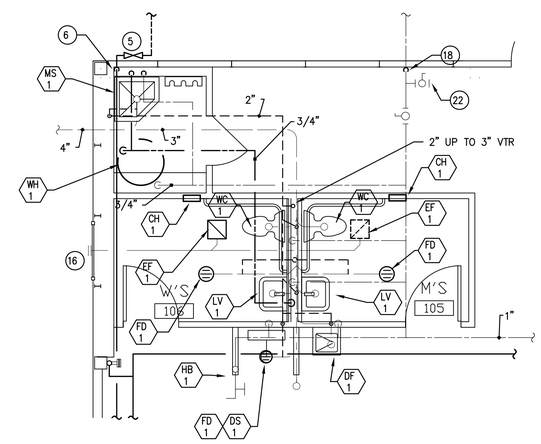

4 MP-2 WASTE AND VENT DETAIL HANGAR "A"

1/4" = 1'-0"

REFER TO DRAWING MP-1 FOR PLAN NOTES.

HVAC/PLUMBING LEGEND

NOT ALL SYMBOLS LISTED BELOW ARE USED ON THIS SET OF DRAWINGS

SYMBOL	DESCRIPTION	SYMBOL	DESCRIPTION
— HS —	HEATING WATER SUPPLY		FIRE DAMPER
— HR —	HEATING WATER RETURN		MANUAL VOLUME DAMPER
— CHS —	CHILLED WATER SUPPLY	M	MOTORIZED DAMPER
— CHR —	CHILLED WATER RETURN		POINT OF CONNECTION (N TO E)
—120° HS—	120° HEATING WATER SUPPLY		PUMP
—120° HR—	120° HEATING WATER RETURN		STRAINER
— S —	STEAM		THERMOSTIC STEAM TRAP
— C —	CONDENSATE		F/T STEAM TRAP
— PC —	PUMPED CONDENSATE	B	INVERTED BUCKED STEAM TRAP
— RL —	REFRIGERANT LIQUID		DOMESTIC COLD WATER (CW)
— RS —	REFRIGERANT SUCTION		DOMESTIC HOT WATER (HW)
— RHG —	REFRIGERANT HOT GAS		HOT WATER CIRCULATING (HWC)
— RDL —	ROOF DRAIN LEADER		WASTE
— RDLO —	ROOF DRAIN LEADER – OVERFLOW		VENT
	DIRECTION OF FLOW	—RD—	ROOF DRAIN
	PIPE CAP OR PLUG	—G—	NATURAL GAS
	PIPING UP	—LP—	LP GAS
	PIPING DOWN	—CA—	COMPRESSED AIR
	EXPANSION JOINT		HOSE BIBB / WALL HYDRANT
	FLEXIBLE CONNECTOR		BACKFLOW PREVENTER
	BALANCING VALVE		FUNNEL DRAIN
	2-WAY T.C. VALVE		FLOOR DRAIN
	3-WAY T.C. VALVE		FLOOR SINK
	SOLENOID VALVE		VENT THROUGH ROOF (VTR)
	PRESSURE REDUCING VALVE	M	WATER METER
	PLUG VALVE	M	GAS METER
	BALL VALVE		
	PRESSURE/TEMPERATURE TAP	(E)	EXISTING
	SHUT-OFF VALVE	(N)	NEW
	CHECK VALVE	NIC	NOT IN CONTRACT
	UNION	N.T.S.	NOT TO SCALE
	THERMOMETER	C.O.T.G.	CLEANOUT TO GRADE
	PRESSURE GAUGE	F.C.O.	FLOOR CLEANOUT
	PRESSURE RELIEF VALVE	R.D.	ROOF DRAIN
T	THERMOSTAT	R.D.O.	OVERFLOW ROOF DRAIN
H	HUMIDISTAT	A.F.F.	ABOVE FINISHED FLOOR

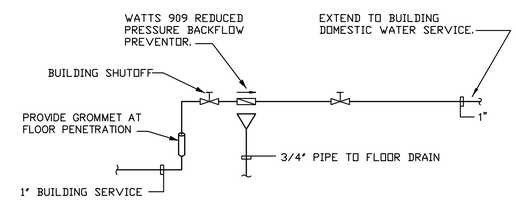

5 MP-2 PRESSURE REDUCING STATION DETAIL

N.T.S.

MECHANICAL + PLUMBING EQUIPMENT LIST:

TD-1 TRENCH DRAIN
ZURN FLO-THRU 806 PRE- MANUFACTURED DRAIN
6" WIDE, PRE- SLOPED TRENCH DRAIN SYSTEM WITH SPECIAL DUTY
Z-806-DG DUCTILE IRON, SLOTTED GRATE, 6" X 20" CATCH BASIN

AC-1 ELECTRIC AIR COMPRESSOR
DAYTON 5Z696
30 GALLON HORIZONTAL TANK
3/4 HP, 208 VOLTS, SINGLE PHASE

UH-1 GAS FIRED UNIT HEATER
REZNOR MODEL F-200
200 MBH HEATING INPUT (LP GAS)
172 MBH HEATING OUTPUT @ 7000 FT. ELEV.
1/20 HP @ 120 VOLT

UH-2 GAS FIRED UNIT HEATER
REZNOR MODEL F-250
250 MBH HEATING INPUT (L.P. GAS)
215 MBH HEATING OUTPUT @ 7000 FT. ELEV.
1/6 HP @ 120 VOLT

EC-1 EVAPORATIVE COOLER
ESSICK CA-13000
7640 CFM @ 0.5" S.P.
1-1/2 HP., 208 VOLT, SINGLE PHASE

EC-2 EVAPORATIVE COOLER
ESSICK CA-16000
11000 CFM @ 0.25" S.P.
3 HP., 208 VOLT, SINGLE PHASE

SA-1 SUPPLY AIR GRILLE
METALAIRE V4004
SIZE AS SHOWN ON DRAWING

EF-1 CEILING FAN
BROAN MODEL 671
70 CFM, 0.25" S.P.
20 AMPS, 120 VOLTS

MS-1 MOP SINK
FIAT 2424
FLOOR MOUNTED MOP SINK. PROVIDE COMPLETE WITH KOHLER K-8907 SERVICE SINK FAUCET AND WIRE RIM GAURD.

LV-1 WALL HUNG LAVATORY – ADA
KOHLER K-2006
PROVIDE COMPLETE WITH K-7443-5E LAVATORY FAUCET WITH WRIST BLADE HANDELS, GRID STRAINER, P-TRAP ANGLE SUPPLIES AND STOP.

FD-1 FLOOR DRAIN
ZURN MODEL Z-415-"B"
CAST IRON BODY WITH 3" BOTTOM OUTLET, COMBINATION INVERTABLE MEMBRANE CLAMP AND ADJUSTABLE COLLAR POLISHED NIKEL BRONZE STRAINER, AND AUTO-MATIC TRAP PRIMER.

WC-1 WATER CLOSET- ADA
KOHLER K-3427
FLUSH TANK 1.6 GALLON WITH ELONGATED BOWL
PROVIDE COMPLETE WITH OPEN FRONT SEAT COVER AND ANGLE SUPPLIES AND STOP.

HB-1 HOSEBIBB
WOODFORD MODEL 24
ANTI-SIPHON TYPE
VERIFY MOUNTING REQUIREMENTS AND EXACT LOCATION WITH ARCHITECT PRIOR TO ROUGH-IN.

DF-1 DRINKING FOUNTAIN
HAWS MODEL 1118
WALL MOUNTED BARRIER FREE DRINKING FOUNTAIN
STAINLESS STEEL, SINGLE LEVEL
PROVIDE COMPLETE WITH SUPPORT CARRIER, P-TRAP ANGLE SUPPLIES, AND STOP.

SO-1 SAND/OIL INTERCEPTOR
1000 GALLON UNIT WITH (2) MANHOLE COVERS/CLEANOUTS
4000 PSI COMPRESSIVE STRENGTH CONCRETE, AVAILABLE FROM COPELAND CONCRETE IN RIFLE, COLORADO, PHONE (970) 625-1112

CH-1 ELECTRIC CABINET HEATER
BERKO SRA-1012 WALL MOUNTED HEATER
1.0 KW AT 120 VOLT
PROVIDE COMPLETE WITH SURFACE MOUNTING KIT.

WH-1 ELECTRIC WATER HEATER
A.O. SMITH DEL-6
6 GALLON CAPACITY
6 GPH CONTINUOUS FLOW AT 100° RISE
1500 WATTS AT 120V.

DS-1 DELUGE SHOWER/ EYE WASH UNIT
BRADLEY MODEL S19-310
SHOWER HEAD AND EYE WASH BOWL CONSTRUCTED OF YELLOW IMPACT-RESISTANT PLASTIC
CHROME-PLATED BRASS 1" IPS STAY-OPEN SHOWER BALL VALVE
CHROME-PLATED BRASS 1/2" IPS STAY-OPEN EYE WASH BALL VALVE
CHROME-PLATED BRASS SPRAYHEAD ASSEMBLY WITH TWIN, SOFT FLOW, EYE WASH HEADS AND PROTECTIVE SPRAYHEAD COVERS
PIPE AND FITTINGS TO BE CONSTRUCTED OF 1-1/4" GALVANIZED STEEL PROTECTED WITH BRADTECT SAFETY YELLOW COATING

ET-1 EXPANSION TANK
AMTROL EXTROL MODEL 15
ASME RATED
2 GALLON TANK VOLUME

PLUMBING FIXTURE CONNECTION/MOUNTING HEIGHT SCHEDULE

ITEM	DESCRIPTION	WASTE	VENT	HW	CW	HEIGHT A.F.F.
FD-1	FLOOR DRAIN	3"	2"	—	—	—
LV-1	WALL HUNG LAVATORY	1-1/2"	1-1/2"	1/2"	1/2"	31"
WC-1	WATER CLOSET – TANK (HANDICAP)	3"	2"	—	1/2"	18"
HB-1	HOSE-BIBB	—	—	—	3/4"	12"
MS-1	JANITORS SINK (MOP SINK)	3"	2"	1/2"	1/2"	—
DF-1	DRINKING FOUNTAIN	1-1/4"	1-1/4"	—	1/2"	40"
DS-1	DELUGE SHOWER	---	---	—	1"	---
MS-1	MOP SINK	3"	2"	1/2"	1/2"	---

BAI
BURGGRAAF ASSOCIATES INC.
CONSULTING ENGINEERS
715 HORIZON DR., SUITE 220
GRAND JUNCTION, COLORADO 81506
(970) 243-3001 FAX(970) 243-3006

CANYONLANDS FIELD
MOAB, UTAH

REV.	DATE

DRAWING TITLE:
MECHANICAL DETAILS AND SCHEDULES

DATE: 08-27-98
SCALE: 1/8"=1'-0"
PROJ. NO. 8054
DRAWN BY: BAI
CHKD BY: MB

DRAWING NO.
MP-2

OF 2

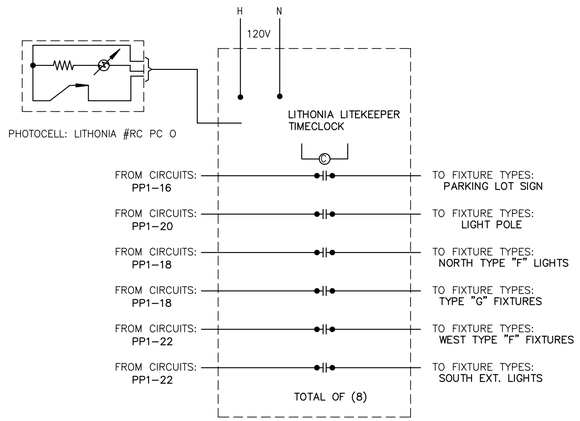

N.T.S.

EXTERIOR LIGHTING CONTROL

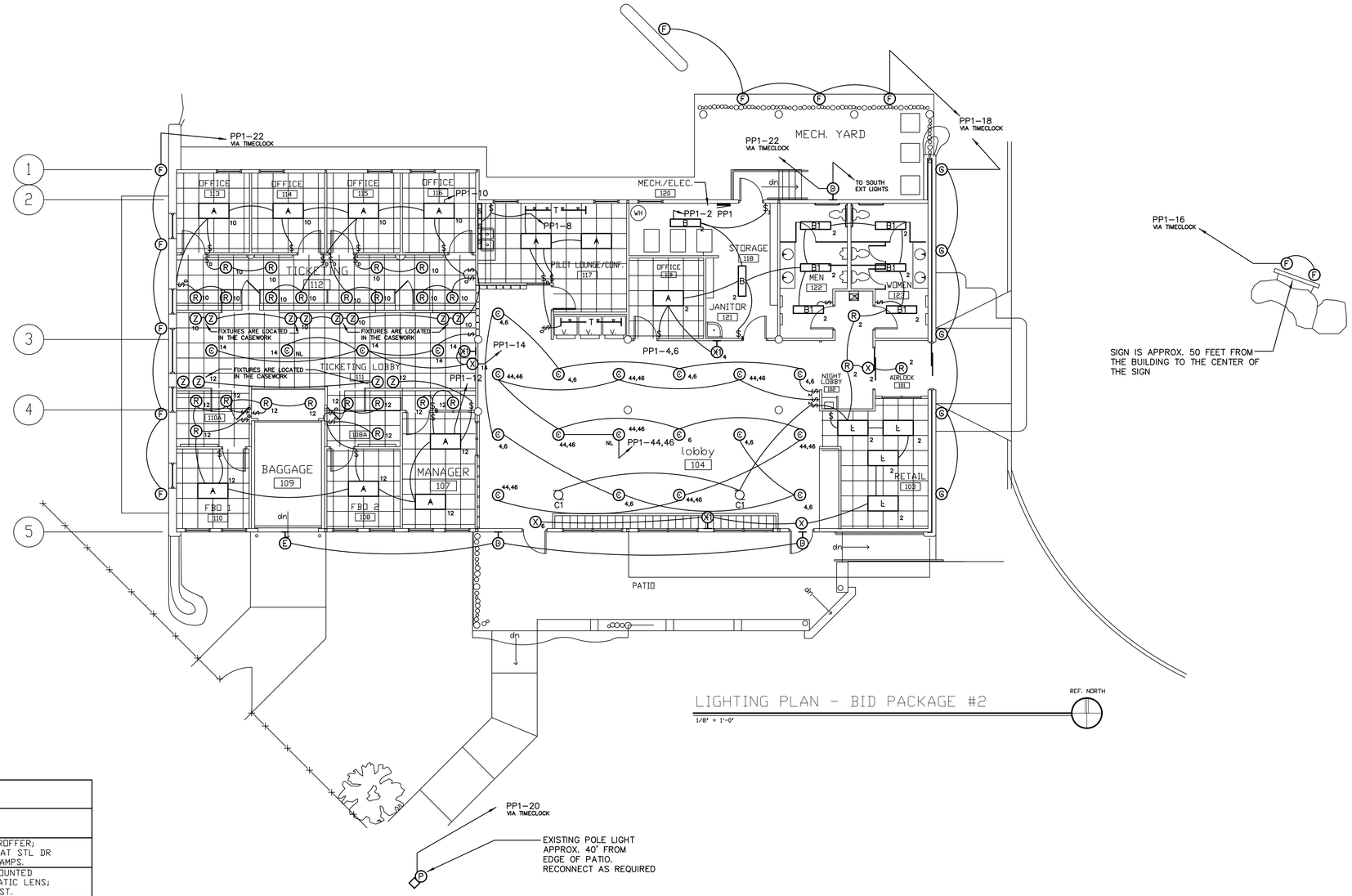

LIGHTING PLAN - BID PACKAGE #2

1/8" = 1'-0"

LIGHTING FIXTURE SCHEDULE

DES	MANUFACTURER CATALOG NUMBER	VOLTAGE MOUNTING # OF LAMPS	BALLAST CATALOG NUMBER LAMP TYPE LAMP CATALOG NUMBER	DESCRIPTION
A	LITHONIA 2SPG432 A12.125 120 GEB	120 RECESSED 4	ELECTRONIC FLUORESCENT F32T8SP41	24"W X 48"L X 4 1/2"H LAY-IN TROFFER; .125" ACRYLIC PRISMATIC LENS; FLAT STL DR ELECTRONIC BALLAST AND 4100K LAMPS.
B	LITHONIA LB232A 120 GEB ---	120 SURFACE 2	ELECTRONIC FLUORESCENT F32T8SP41	10" W X 3" D X 48" L SURFACE MOUNTED WRAPAROUND WITH ACRYLIC PRISMATIC LENS; 4100K LAMPS & ELECTRONIC BALLAST.
B1	LITHONIA SPF 232 A12.125 120 GEB	120 RECESSED 2	ELECTRONIC FLUORESCENT F32T8SP41	12" W X 48" L X 4-7/8" H FLANGED TROFFER; .125" ACRYLIC PRISMATIC LENS; FLAT STEEL DOOR; 4100K LPS & ELECT BLST
C	LITHONIA CEP 13 250M 120 ---	120 PENDANT MOUNT 1	WITH FIXTURE METAL HALIDE 250W MH	PENDANT MOUNTED LIGHT FIXTURE. 13" SQ. BY 23" LONG. VERIFY PENDANT HEIGHT WITH THE ARCHITECT PRIOR TO PURCHASE.
C1	EMERSON HF956BK ---	120 SURFACE ---	NONE NONE NONE	56" DIAMETER CEILING FAN. 120 VOLT 85 WATTS.
D	RUUD SE5407-D 120	120 WALL SURFACE 1		8" W X 8" H X 7 3/4" D SURFACE MOUNTED UP/DOWN LIGHT WITH CUSTOM METAL COVER (BY OTHERS) INSTALLATION OF BOTH BY E.C.
E	LUMINUS W507.18	120 SURFACE 1		CAST ALUMINUM FIXTURE ON STEEL ARCH AND ALUMINUM WALL COVER PLATE . METALLIC BRONZE COLOR.
F	HUBBELL AFF-026-WL	120 GROUND 1	WITH FIXTURE FLUORESCENT 26 W WITH FIXTURE	GROUND MOUNTED DIRECTIONAL AREA LIGHT. 10 3/4" L X 5" W EXTRUDED ALUMINUM HOUSING.
G	HUBBELL 532-MVB ---	120 GROUND 1	WITH FIXTURE MERCURY VAPOR 100 W MED BASE LAMP	GROUND MOUNTED WELL UP LIGHT. SPREAD LENS WITH ALUMINUM LOUVERS
L	LITHONIA 2PM3G 432 32LD 120 GEB	120 RECESSED 4	ELECTRONIC FLUORESCENT F32T8SP41	24" W X 48" L X 6" H TROFFER WITH 32 CELL PARABOLIC LOUVER. ELECTRONIC BALLAST & 4100K LAMPS.
R	LITHONIA A6AR TRW ---	120 CEILING RECESS 1	NONE INCANDESCENT 100W A19	6 1/4" DIA. X 10 1/8" DIE-CAST ALUMINUM HOUSING WITH CLEAR REFLECTOR AND WHITE PAINTED FLANGE. THERMALLY PROTECTED.
S	LITHONIA UC24 120 ---	120 UNDER CABINET 2	WITH FIXTURE FLUORESCENT 8W T5 SP41	5 1/4" W X 24" L X 1 3/4" D UNDER CABINET LIGHT WITH MILK WHITE ACRYLIC LENS.
T	JUNO	120 CEILING SURFACE 1	NONE INCANDESCENT	8" LONG TRACT FIXTURE. BLACK FINISH. SEE PLANS FOR NUMBER OF HEADS.
X	LITHONIA LES1R120ELN ---	120 SURFACE 1	STANDARD WITH FIXTURE ELECTROLUMINESCENT ---	EXIT; RED LETTERS; SINGLE STENCIL FACE. BRUSHED ALUMINUM. UNIVERSAL MOUNTING CANOPY; ARROWS & BATTERY.
X1	LITHONIA 6ELM2 ---	120 WALL SURFACE 2	NONE INCANDESCENT 7.2 WATT	INJ. MOLDED HIGH IMPACT THERMOPLASTIC EMERGENCY EGRESS LIGHT TWIN HEADS. UNIVERSAL MOUNTING
Z	LUCIFER SS3/W ---	12 SURFACE MOUNT 1	NONE INCANDESCENT 50 W MR16	50 WATT SURFACE MOUNTED LOW VOLTAGE SPOT LIGHT. PROVIDE TWO 12 VOLT TRANSFORMERS SIZED TO LIGHT EACH SIDE OF TICKET AREA.

SYMBOL LEGEND

GENERAL NOTES:

SEE THE SPECIFICATIONS FOR ADDITIONAL INFORMATION.

THIS SYMBOL LEGEND IS FOR GENERAL REFERENCE USE. SPECIFIC REQUIREMENTS ON THE PLANS OR SCHEDULES TAKE PRECEDENCE.

MOUNTING HEIGHTS SHOWN ON THE PLANS TAKE PRECEDENCE OVER THIS LEGEND.

ABBREVIATIONS

A	AMPERES
AFF	ABOVE FINISHED FLOOR
AFG	ABOVE FINISHED GRADE
BKR	BREAKER
C	CONDUIT
EMT	ELECTRICAL METALLIC TUBING
GRC	GALVANIZED RIGID CONDUIT
GRD	GROUND
GFI	GROUND FAULT INTERRUPTER
IG	ISOLATED GROUND
NIC	NOT IN CONTRACT
NTS	NOT TO SCALE
PVC	POLYVINYL CHLORIDE
WP	WEATHERPROOF

SERVICE ENTRANCE

- M — METER, MH = 5'-0" TO TOP
- TELEPHONE TERMINAL, MH = 4'-6" TO CENTER
- PAD MOUNTED TRANSFORMER

EQUIPMENT

- MAGNETIC MOTOR STARTER, MH = 4'-6" TO TOP
- F — FUSED DISCONNECT, MH = 4'-6" TO TOP
- UNFUSED DISCONNECT, MH = 4'-6" TO TOP
- M — MOTOR
- L1A — PANELBOARD, L1A = DESIGNATION, 5'-0" TO TOP
- PC — PHOTOCELL

OUTLETS

- WP GFI — DUPLEX RECEPTACLE, WP = WEATHERPROOF, GFI = GROUND FAULT INTERRUPTER
- FOURPLEX RECEPTACLE
- SPECIAL – SEE EQUIPMENT SCHEDULE
- TELEPHONE – WALL

GENERAL SYMBOLS

- AC 1 — EQUIPMENT, AC-1 = DESIGNATION – SEE SCHED.
- 1 — FLAG NOTE
- 1 — REVISION

LIGHTING FIXTURES

- A — FLUORESCENT – LENSED, A = FIXTURE TYPE – SEE SCHEDULE
- A — FLUORESCENT – OPEN
- A — CEILING MOUNTED
- A — WALL BRACKET, MH = SEE PLANS

SWITCHES MH = 3'-10" TO CENTER

- $ — SINGLE POLE
- $F — FUSESTAT
- $P — WITH PILOT LIGHT

ONE LINE DIAGRAM

FEEDER:

2-2"PVC	NO. OF CONDUITS – SIZE & MATERIAL
3 #4/0	NUMBER & SIZE OF O & N
THW – AL	INSULATION & CONDUCTOR
1 #4 GRD	GROUND SIZE (IF USED)
THW – CU	INSULATION & CONDUCTOR

- M — METER
- LP1 — PANELBOARD – SEE SCHEDULE, LP1 = DESIGNATION
- 60/3 — FUSED SWITCH, 60 AMP 3 POLE FRAME
- 50 KTNR — 50 AMP KTNR FUSE

BURGGRAAF ASSOCIATES INC.
CONSULTING ENGINEERS
715 HORIZON DR. SUITE 2B
GRAND JUNCTION, COLORADO 81506
(970) 242-3931 FAX (970) 242-0928

CANYONLANDS FIELD
MOAB, UTAH

REV.	DATE

DRAWING TITLE:
ELECTRICAL PLANS

DATE: 11-6-98
SCALE: 1/8"=1'-0"
PROJ. NO. 8054
DRAWN BY: BAI
CHKD BY: BAI

DRAWING NO.
E-1
OF 2

EQUIPMENT SCHEDULE - MECHANICAL EQUIPMENT

CONTROLLERS:
CDMB = COMBINATION STARTER/DISCONNECT
CON = CONTACTOR
MAG = MAGNETIC MOTOR STARTER
MAN = MANUAL MOTOR STARTER
NR = NONE REQUIRED
FU = FUSESTAT
WU = MOUNTED AND WIRED WITH EQUIPMENT

DISCONNECTS:
30/20 = 30A FRAME/20A FUSE
30/-- = 30A FRAME/NO FUSE
MAN = MANUAL MOTOR STARTER
NR = NONE REQUIRED
PI = PLUG IN
FU = FUSESTAT
WU = MOUNTED AND WIRED WITH EQUIPMENT

DESIGNATION & RATINGS DESCRIPTION	BRANCH CIRCUIT RACEWAY	PH & N	GROUND	BREAKER FLA	CONTROLLER DISCONNECT	CONTROL DEVICE FOOTNOTES
AC-1 5.00 HP 208 V 3PHASE AIR COMPRESSOR	0.50 IN EMT	3 #10	--- NONE	30A 16.8 A	NR PI	NONE REQUIRED
CH-1 1000 W 120 V 1PHASE ELECTRIC CABINET HEATER	0.50 IN EMT	2 #12	--- NONE	20A 8.3 A	NR NR	THERMOSTAT
EC-1 1.50 HP 208 V 1PHASE EVAPORATIVE COOLER	0.50 IN EMT	2 #12	--- NONE	20A 11.0 A	NR PI	SWITCH
EC-2 3.00 HP 208 V 1PHASE EVAPORATIVE COOLER	0.50 IN EMT	2 #10	--- NONE	30A 18.8 A	NR 30/--	SWITCH
EF-1 150 W 120 V 1PHASE FAN/LIGHT	0.50 IN EMT	2 #12	--- NONE	20A 1.25 A	NR NR	SWITCH
UH-1 .050 HP 120 V 1PHASE GAS FIRED UNIT HEATER	0.50 IN EMT	2 #12	--- NONE	20A 2.1 A	NR FU	NONE REQUIRED
UH-2 .170 HP 120 V 1PHASE GAS FIRED UNIT HEATER	0.50 IN EMT	2 #12	--- NONE	20A 5.6 A	NR FU	NONE REQUIRED
WH-1 1500 W 120 V 1PHASE WATER HEATER	0.50 IN EMT	2 #12	--- NONE	20A 12.5 A	NR SW	NONE REQUIRED

PANEL SCHEDULE - PPA HANGER "A" LIGHTING AND POWER

PANEL TYPE: PANELBOARD
MAIN BREAKER: NONE
BUS SIZE: 225 A
PHASES: 3
WIRES: 4
MOUNTING: FLUSH
VOLTAGE: 120/208 V
CONNECTED: 42442 W
DEMAND: 40643 W
PHASE A CONNECTED: 14824 W
PHASE B CONNECTED: 14814 W
PHASE C CONNECTED: 12804 W

LOAD TYPE AND DESCRIPTION	AMPS	POLES	CKT #	PHASE	CKT #	POLES	AMPS	LOAD TYPE AND DESCRIPTION
MISC: WELDER	50A	2P	1	A	2	--	---	MISC: ---
MISC: ---	---	--	3	B	4	3P	30A	MISC: UNIT AC-1
MECH- COOL: UNIT EC-1	20A	2P	5	C	6	--	---	MISC: ---
MECH- COOL: ---	---	--	7	A	8	1P	20A	RECEPTACLE: SHOP OUTLETS
MECH- COOL: UNIT EC-1	20A	2P	9	B	10	1P	20A	RECEPTACLE: SHOP OUTLETS
MECH- COOL: ---	---	--	11	C	12	1P	20A	RECEPTACLE: SHOP OUTLETS
MISC: FIRE FIGHTING BUILDING	50A	2P	13	A	14	1P	20A	MISC: TELEPHONE BOARD
MISC: ---	---	--	15	B	16	1P	20A	RECEPTACLE: HANGAR OUTLETS
MISC: ---	---	--	17	C	18	1P	20A	RECEPTACLE: HANGAR OUTLETS
MISC: HANGAR DOOR	20A	3P	19	A	20	1P	20A	RECEPTACLE: BATHROOM OUTLETS
MISC: ---	---	--	21	B	22	1P	20A	MECH- HEAT: UNIT CH-1
LIGHTING: RAMP LIGHTS	20A	2P	23	C	24	1P	20A	MECH- HEAT: UNIT CH-1
LIGHTING: ---	---	--	25	A	26	1P	20A	MECH- HEAT: UNIT UH-1
LIGHTING: HANGAR LIGHTING	20A	2P	27	B	28	1P	20A	MECH- HEAT: UNIT UH-1
LIGHTING: ---	---	--	29	C	30	1P	20A	MISC: UNIT WH-1
LIGHTING: BATHROOM LIGHTING	20A	1P	31	A	32	1P	20A	SPARE: UNALLOCATED FUTURE
SPARE: UNALLOCATED FUTURE	20A	1P	33	B	34	1P	20A	SPARE: UNALLOCATED FUTURE
SPARE: UNALLOCATED FUTURE	20A	1P	35	C	36	1P	20A	SPARE: UNALLOCATED FUTURE
SPACE ---	---	--	37	A	38	--	---	SPACE ---
SPACE ---	---	--	39	B	40	--	---	SPACE ---
SPACE ---	---	--	41	C	42	--	---	SPACE ---

PANEL SCHEDULE - PPB HANGER "B" LIGHTING AND POWER

PANEL TYPE: PANELBOARD
MAIN BREAKER: NONE
BUS SIZE: 225 A
PHASES: 3
WIRES: 4
MOUNTING: FLUSH
VOLTAGE: 120/208 V
CONNECTED: 48049 W
DEMAND: 46250 W
PHASE A CONNECTED: 16973 W
PHASE B CONNECTED: 16963 W
PHASE C CONNECTED: 14533 W

LOAD TYPE AND DESCRIPTION	AMPS	POLES	CKT #	PHASE	CKT #	POLES	AMPS	LOAD TYPE AND DESCRIPTION
MISC: WELDER	50A	2P	1	A	2	--	---	MISC: ---
MISC: ---	---	--	3	B	4	3P	30A	MISC: UNIT AC-1
MECH- COOL: UNIT EC-1	30A	2P	5	C	6	--	---	MISC: ---
MECH- COOL: ---	---	--	7	A	8	1P	20A	RECEPTACLE: HANGAR OUTLETS
MECH- COOL: UNIT EC-1	30A	2P	9	B	10	1P	20A	RECEPTACLE: HANGAR OUTLETS
MECH- COOL: ---	---	--	11	C	12	1P	20A	RECEPTACLE: HANGAR OUTLETS
RECEPTACLE: STORAGE 102,103	20A	1P	13	A	14	1P	20A	MISC: TELEPHONE BOARD
RECEPTACLE: STORAGE 103,104	20A	1P	15	B	16	1P	20A	SPARE: UNALLOCATED FUTURE
MISC: ---	---	--	17	C	18	1P	20A	SPARE: UNALLOCATED FUTURE
MISC: HANGAR DOOR	20A	3P	19	A	20	1P	20A	RECEPTACLE: BATHROOM OUTLETS
MISC: ---	---	--	21	B	22	1P	20A	MECH- HEAT: UNIT CH-1
LIGHTING: RAMP LIGHTING	20A	2P	23	C	24	1P	20A	MECH- HEAT: UNIT CH-1
LIGHTING: ---	20A	1P	25	A	26	1P	20A	MECH- HEAT: UNIT UH-1
LIGHTING: HANGAR LIGHTING	20A	2P	27	B	28	1P	20A	MECH- HEAT: UNIT UH-1
LIGHTING: ---	---	--	29	C	30	1P	20A	MISC: UNIT WH-1
LIGHTING: BATHROOM LIGHTING	20A	1P	31	A	32	1P	20A	SPARE: UNALLOCATED FUTURE
SPARE: UNALLOCATED FUTURE	20A	1P	33	B	34	1P	20A	SPARE: UNALLOCATED FUTURE
SPARE: UNALLOCATED FUTURE	20A	1P	35	C	36	1P	20A	SPARE: UNALLOCATED FUTURE
SPACE ---	---	--	37	A	38	--	---	SPACE ---
SPACE ---	---	--	39	B	40	--	---	SPACE ---
SPACE ---	---	--	41	C	42	--	---	SPACE ---

FLAG NOTES:

1. PROVIDE A STATIC GROUNDING RECEPTACLE WITH GROUNDING STUD, CAP AND CHAIN SIMILAR TO A CROUSE-HINDS #GCR210. INSTALL GROUNDING RECEPTACLE ON A 3/4" X 10' THREADED GROUND ROD SIMILAR TO A BLACKBURN #7510S. PROVIDE A GROUNDING CONNECTOR FOR EACH GROUNDING RECEPTACLE SIMILAR TO A CROUSE-HINDS #GCT8.
2. PROVIDE A 60 AMP NEMA 3R DISCONNECT ON THE EXTERIOR OF THE FIRE FIGHTING BUILDING. RECONNECT THE EXISTING PANEL WITHIN THE BUILDING. INSTALL A 5/8" X 10' DRIVEN ROD AND GROUND THE BUILDING STEEL WITH A #6 COPPER GROUNDING ELECTRODE CONDUCTOR.
3. ELECTRICAL CONTRACTOR IS TO PROVIDE AND INSTALL AN AUTOMATIC TRANSFER SWITCH FOR THE EXISTING GENERATOR. PROVIDE DOOR MOUNTED METERS, EXERCISER CLOCK, & BATTERY CHARGER. UNIT TO BE SIMILAR TO AN ONAN OT 225.
4. PROVIDE PRICING INFORMATION TO REPLACE EXISTING GENERATOR WITH A NEW UNIT SIMILAR TO AN ONAN 60 DGCB OR AN ONAN GGHB WITH 300 GALLON PROPANE TANK.

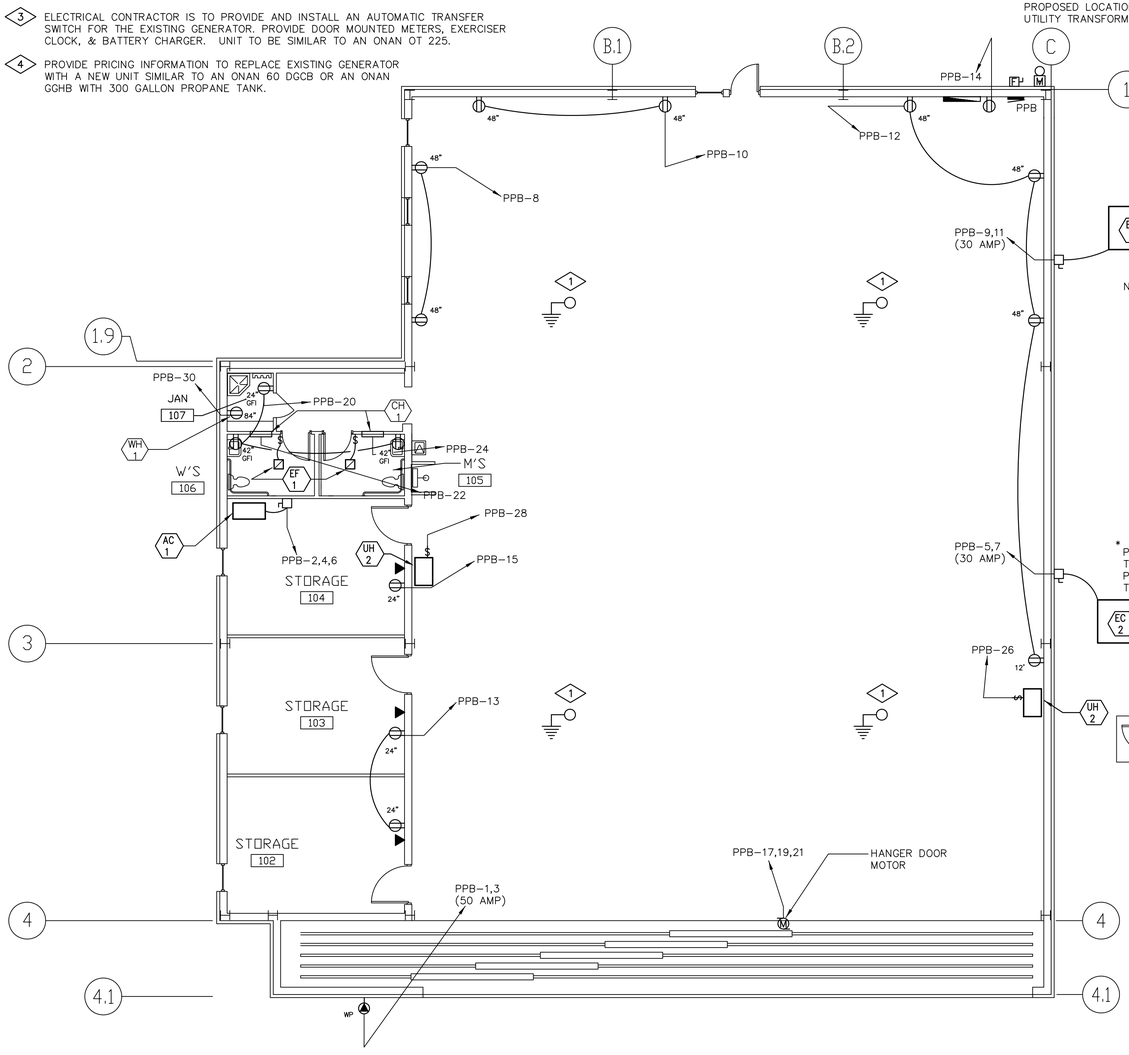

HANGER B PLAN

1/8" = 1'-0"

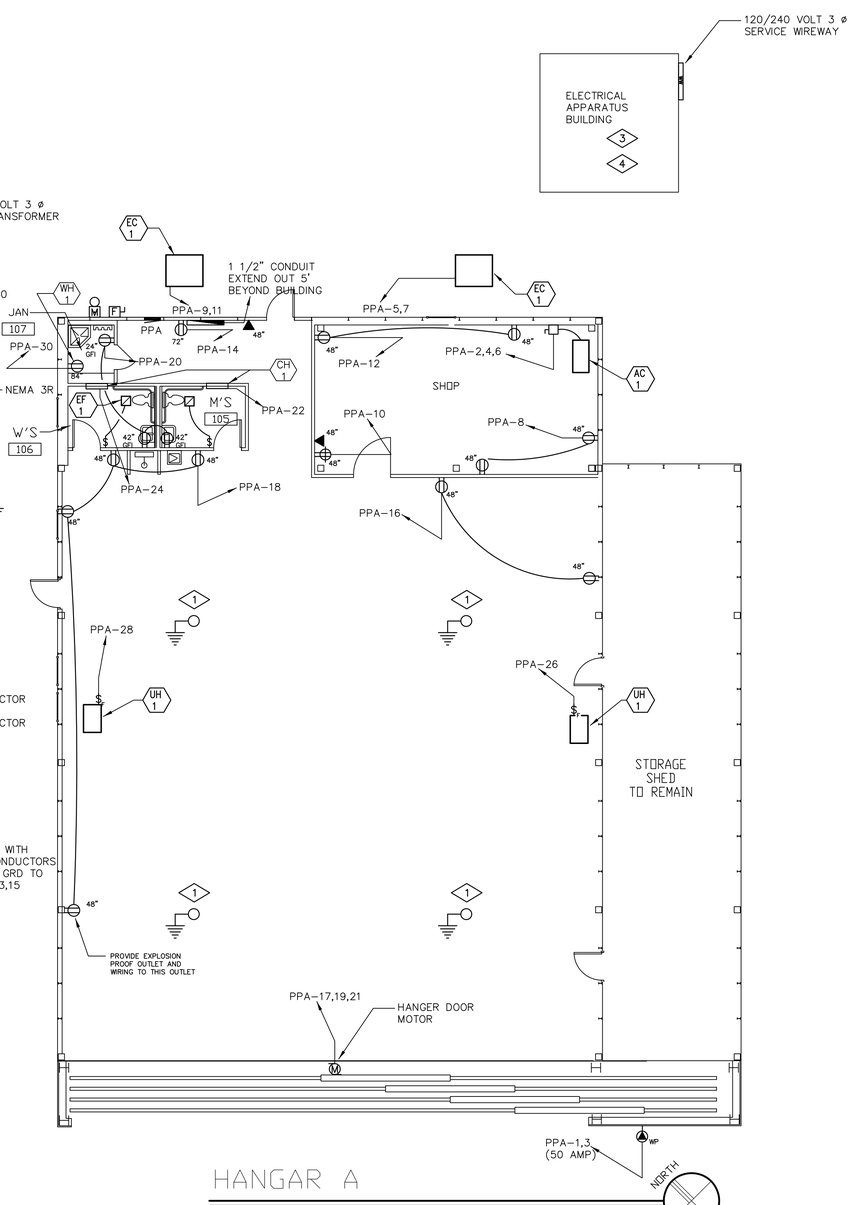

HANGER A

1/8" = 1'-0"

EXISTING BUILDING TO BE REMODELED

ONE LINE DIAGRAM

SCALE: 1/8"=1'-0"

* PROVIDE A #4 COPPER GROUNDING ELECTRODE CONDUCTOR TO THE BUILDING STEEL, AND THE FOUNDATION STEEL. PROVIDE A #6 COPPER GROUNDING ELECTRODE CONDUCTOR TO A 5/8" X 8' DRIVEN ROD.

BURGGRAAF ASSOCIATES INC.
CONSULTING ENGINEERS
715 HORIZON DR., SUITE 208
GRAND JUNCTION, COLORADO 81506
(970) 243-3001 FAX(970) 243-5026

CANYONLANDS FIELD
MOAB, UTAH

REV.	DATE

DRAWING TITLE:
HANGER ELECTRICAL POWER PLANS

DATE: 08-27-98
SCALE: 1/8"=1'-0"
PROJ. NO. 8054
DRAWN BY: BAI
CHKD BY: BAI

DRAWING NO.
E-2